SILICON CHIP

JULY 2018
ISSN 1030-2662
07
9 771030 266001
PP255003/01272
$9.95* INC GST NZ$12.90 INC GST

The VERY BEST DIY Projects!

STOP **BEING CHEATED BY YOUR SMART METER!**

EXTREMELY CLEVER ELECTRICITY TARIFF TIME-OF-DAY CLOCK

You tell it your local tariff and times . . .it reminds you when they're charging you huge $$$ for electricity!

What's new with the latest

Raspberry Pi Model 3 B+

And putting it to work:

Pi TIDE CHART & INFO SCREEN

Display tide heights (and much more!) for anywhere in Australia and the S-W Pacific!

What is the most REVOLUTIONARY electronics innovation of the 20th century?

We reckon it's this one!

You'll see why inside!

Great beginner's project (and really useful, too!):

Recurring Event Reminder/Memory Jogger

Battery operated – Cheap – Easy to set for hours - days - weeks - fortnights

Jaycar Electronics
Better, More Technical

duinotech

Project of the Month:

Our very own specialists are developing fun and challenging Arduino®-compatible projects for you to build every month, with special prices exclusive to Nerd Perks Club Members. Sure, you can buy off the shelves but where's the FUN in that!

Fridge Door Alarm:

STEP-BY-STEP INSTRUCTIONS AT:
jaycar.com.au/fridge-door-alarm

VALUED AT $59.65

NERD PERKS CLUB OFFER
BUNDLE DEAL $39.95
SAVE 30%

This useful and simple project may save you the cost of throwing out good food that went off, or even replacing your fridge! all because someone forgets to close the fridge door. If the fridge door is not properly closed within a specified time, the Fridge Alarm will sound alerting you to close the door. The display and keypad make it really easy to set the delay time to suit your busy household needs.

SKILL LEVEL: BEGINNER
TOOLS: SOLDERING IRON
SOLDER

WHAT YOU NEED:

UNO DUINOTECH CLASSIC BOARD	XC-4410	**$29.95**
2 X 16 LCD CONTROLLER MODULE	XC-4454	**$19.95**
REED SWITCH	LA-5072	**$4.95**
BUZZER MODULE	XC-4424	**$3.95**
28 PIN HEADER STRIP	HM-3211	**$0.85**

SEE OTHER PROJECTS AT:
www.jaycar.com.au/arduino

Add A Melody:

$4.25

76MM ALL-PURPOSE REPLACEMENT SPEAKER AS-3006
Upgrade the buzzer to a speaker and play musical melodies instead.

Signal It:

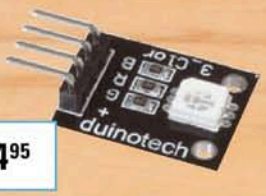

$4.95

RGB LED MODULE XC-4428
Show a LED status light to let you know if the fridge has been opened before.

Automate It:

$5.45

5V RELAY BOARD XC-4419
Use a relay board to switch another circuit, perhaps a light, or maybe the ice dispenser.

Add a Sensor:

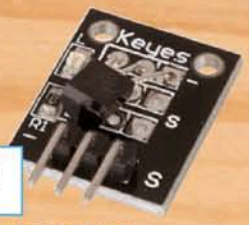

$6.95

DIGITAL TEMPERATURE SENSOR MODULE XC-3700
Sound the alarm when the fridge gets too warm with the door closed.

NERD PERKS CLUB MEMBERS RECEIVE:

20% OFF
ALARM SIRENS & STROBES*

**Applies to Jaycar 620E Alarm Sensor, Sirens & Strobes*

EARN A POINT FOR EVERY DOLLAR SPENT AT ANY JAYCAR COMPANY STORE* & BE REWARDED WITH A $25 JAYCOINS GIFT CARD ONCE YOU REACH 500 POINTS!
**Conditions apply. See website for T&Cs*

REGISTER ONLINE TODAY BY VISITING:
www.jaycar.com.au/nerdperks

Catalogue Sale 24 June - 23 July, 2018

To order: **phone 1800 022 888 or visit www.jaycar.com.au**

Contents

Vol.31, No.7; July 2018

SILICON CHIP

www.siliconchip.com.au

Features & Reviews

16 The farm of the future . . . Part II!
Following last month's report on developments in farm robotics, we look at some of the ground-breaking work being undertaken by some of Australia's leading universities and researchers – by Ross Tester

26 Revolutionary: the Philips Compact Cassette
It was not only revolutionary in the electronics sense – it effectively started the personal audio fervour we know today – but the Philips Compact Cassette and the EL3302 cassette recorder actually helped in a real revolution – by Ian Batty

57 Review: the latest Raspberry Pi – the Model 3 B+
The Pi micro started life as an educational aid but now it has spawned a huge following of dedicated enthusiasts on every continent – by Tim Blythman

82 El Cheapo: 500MHz frequency counter and preamp
Not one but two modules this month: first is a low-cost 500Mhz frequency counter which can be coupled with a wideband (0.1- ~4GHz) preamp to make a very nice, very sensitive and very cheap frequency counter – by Jim Rowe

Constructional Projects

34 Super Clock now shows your electricity tariff
If you don't know when the peak electricity charges kick in your power bills can go sky-high. Our super clock tells you at a glance – by Tim Blythman

60 Raspberry Pi Tide Chart – and more!
Uses data from Australia's Bureau of Meteorology to give you a graphical tide chart, and much more besides – by Tim Blythman

68 How's your memory? Build the event reminder
Taking medication . . . putting the bins out . . . even feeding the chooks . . . you can set this versatile (and cheap) project to remind you! – by John Clarke

72 800W (+) Uninterruptible Power Supply (UPS) Part III
We're finishing off and setting up our new high-spec UPS. And we also answer some early queries by readers – by Duraid Madina and Tim Blythman

Your Favourite Columns

43 Serviceman's Log
Valve amplifiers can be tricky to repair – by Dave Thompson

86 Circuit Notebook
(1) Humidity Controller for Cheesemaking
(2) Multi-pattern, multi-speed LED chaser
(3) LED logic display for circuit development
(4) Using two cheap ICs to generate ±15V DC from 5V DC

90 Vintage Radio
The 6-transistor Motorola 66T1 – by Ian Batty

Everything Else!

2 Editorial Viewpoint
4 Mailbag – Your Feedback
95 Product Showcase
96 Ask SILICON CHIP
101 SILICON CHIP Online Shop
103 Market Centre
104 Advertising Index
104 Notes and Errata

The farmer of the future may spend just as much time in front of a screen as on a tractor! – Page 16

Why is the Philips Compact Cassette and the EL330X cassette recorder considered revolutionary? Read the article on Page 26 and you'll find out!

Are you on time-of-day electricity tariffs? Know when peak charges cut in? You'll $ave big money with this clever tariff clock – Page 34

The latest Raspberry Pi Model 3 B+ will be warmly welcomed by its legions of loyal fans – Page 57

Set reminders for 4, 8, 12 or 24 hours; 7 or 14 days. It's a great (and cheap!) project for beginners too – Page 68

Finishing off our superb new 800W (+) UPS: it's much cheaper and better performing than commercial units! – Page 72

Find us on Facebook
www.facebook.com/siliconchipmagazine

SILICON CHIP
www.siliconchip.com.au

Publisher
Leo Simpson, B.Bus., FAICD

Editor
Nicholas Vinen

Technical Editor
John Clarke, B.E.(Elec.)

Technical Staff
Jim Rowe, B.A., B.Sc
Bao Smith, B.Sc
Tim Blythman, B.E., B.Sc

Technical Contributor
Duraid Madina, B.Sc, M.Sc, PhD

Art Director & Production Manager
Ross Tester

Reader Services
Ann Morris

Advertising Enquiries
Glyn Smith
Phone (02) 9939 3295
Mobile 0431 792 293
glyn@siliconchip.com.au

Regular Contributors
Dave Thompson
David Maddison B.App.Sc. (Hons 1), PhD, Grad.Dip.Entr.Innov.
Geoff Graham
Associate Professor Graham Parslow
Ian Batty

Cartoonist
Brendan Akhurst

SILICON CHIP is published 12 times a year by Silicon Chip Publications Pty Ltd. ACN 003 205 490. ABN 49 003 205 490. All material is copyright ©. No part of this publication may be reproduced without the written consent of the publisher.

Subscription rates: $105.00 per year, post paid, in Australia.
For overseas rates, see our website or email silicon@siliconchip.com.au

Editorial office:
Unit 1 (up ramp), 234 Harbord Rd, Brookvale, NSW 2100.
Postal address: PO Box 139, Collaroy Beach, NSW 2097.
Phone (02) 9939 3295.
E-mail: silicon@siliconchip.com.au

ISSN 1030-2662
Recommended & maximum price only.

Printing and Distribution:
bluestar
Derby Street, Silverwater, NSW 2148.

Editorial Viewpoint

Don't be ripped off by your smart meter

AS I AM SURE you well know, the cost of electricity for Australian consumers is among the highest in the world, which is a huge change from a decade ago when our electricity was among the cheapest. This is not a problem that will be solved easily or quickly but there are some things you can do to minimise the size of your quarterly bill.

You can shop around and get significant "discounts" if you switch to a different provider and pay your bills on time. Even if you don't want to switch, you may still be able to get the discount.

When your current contract expires, shop around and find the best offer available to you, then contact your existing electricity provider and tell them you're going to switch because you were offered a better rate. They may well be able to match it or even do better. Even that result can leave a bad taste because if they're prepared to offer you a discount when you threaten to switch suppliers, that means they have been overcharging you.

But even with the discount, depending on the size of your home and your heating/cooling needs, your family could still be paying many hundreds of dollars a month. So what can you do about it?

First and foremost, you must know how much you are paying and how much power your appliances use. If you have a "smart meter" (whether you wanted one or not), you are likely subject to a *much* higher tariff during peak periods (usually in the evening) than if you did not have a smart meter, although that is offset to some extent with a lower tariff during off-peak periods (usually late at night and in the morning).

The difference between the peak and off-peak tariffs can be huge. One of our staff members cites his latest electricity bill with a peak tariff of 59.4c/kWh, compared with an off-peak rate of 16.5c/kWh (both including GST). So if you can arrange for your most power-hungry appliances to run at off-peak times, you could make significant savings. But you need to be aware at all times just what the tariff is.

The **Tariff Super Clock** project in this issue means you don't have to note the time and then mentally consider the tariff. It's displayed on the clock at all times so you know just how much you are paying for power at any given time, to help you make informed decisions. And other members of your household can also see the rate so there is no excuse for them to be careless of this aspect.

Of course, you can't always avoid using power when the peak tariff is in effect. They call this peak time because that's when demand is the highest, partly because it's around dinner time when you are likely to be cooking and partly because it's around sunset, when people with full-time jobs usually get home and switch on the lights, TV and other appliances.

But if you can run the dishwasher in the morning or late at night and set up your pool pump to run during the off-peak or shoulder periods you can save significant amounts of money, with very little inconvenience.

By the way, if you are presently paying a relatively low flat rate for electricity and are considering installing a solar system, just remember that any grid feed-in tariff will be overwhelmed by the much larger time-of-day tariffs that will be applicable because you will have a mandatory smart meter. In fact, depending on your usage and the size of the feed-in tariff, you may not be any better off overall. Look before you leap!

Nicholas Vinen

*Australia: A shipping charge of $24.00 AUD will be billed on all orders of less than $60.00 AUD. A shipping charge of $20.00 USD will be billed on all orders of less than $50.00 USD. All orders are shipped via UPS, Federal Express, or DHL for delivery within 3-4 days (dependent on final destination). No handling fees. All prices are in Australian dollar or United States dollar. **New Zealand:** A shipping charge of $26.00 (NZD) will be billed on all orders of less than $66.00 (NZD). A shipping charge of $20.00 USD will be billed on all orders of less than $50.00 USD. All orders are shipped via UPS for delivery within 3-4 days (dependent on final destination). All prices are in New Zealand dollar or United States dollar. Digi-Key is an authorized distributor for all supplier partners. New product added daily. Digi-Key and Digi-Key Electronics are registered trademarks of Digi-Key Electronics in the U.S. and other countries. © 2018 Digi-Key Electronics, 701 Brooks Ave. South, Thief River Falls, MN 56701, USA

ecia MEMBER

MAILBAG – your Feedback

Letters and emails should contain complete name, address and daytime phone number. Letters to the Editor are submitted on the condition that Silicon Chip Publications Pty Ltd may edit and has the right to reproduce in electronic form and communicate these letters. This also applies to submissions to "Ask SILICON CHIP", "Circuit Notebook" and "Serviceman".

Concerns over poor quality power boards

I have had a few power boards fail recently. One lasted only 13 months so I decided to open it up and just see why it failed. I could only conclude that its failure was due to poor manufacturing techniques and sub-standard metallurgy in the soft brass (as opposed to hard drawn brass) used to press out the brass connections.

In years gone by most, if not all, power boards utilised a two-pronged contact mechanism that ensured a very good connection when a 230VAC mains plug was inserted. Old names like HPM, Clipsal, Utilux and others manufactured quality products here in Australia; not any more.

These days, a strip of soft brass is used and a slot is "punched out" into the strip, thus allowing the prong of the 230VAC plug to be held in contact. At least, that is the theory. I see many "flash-over" burns in my power board. Several are quite severe. Worse, for the Earth pin, only one of the two contacts seems to actually be making a connection!

Noting the poor quality, I ventured to purchase a new 6-way power board and wound up with one with a MOV and two USB outlets. I had the expectation that it would be a better-made product.

I had only just opened the packet and connected my PC and four other items to it and while using my PC, I heard that dreaded sizzling sound coming from the power board, then my PC shut down.

I disconnected everything that was plugged in and decided to use a 15-year-old HPM power board. It is great and I am still using it.

So I decided to open up this brand new powerboard. Much to my horror, it revealed basically the same problems of relying on this insane "punched out" slot concept made from soft brass to make connections to the pins. How disappointing. Some of the brass had already deformed from plug insertion and clearly could not make good contact with the pins any more.

I noted "flash-over" burn marks on this power board which I only started using ten days ago. The power board has a 3-year warranty. What a joke.

Jeff Rose,
St Andrews, NSW.

Nicholas responds: I have been having similar problems with power points. I recently had to replace most of the brand new power points in my home since many of them did not make contact with appliance plugs at all.

In many cases, gently wiggling the mains plug would cause the appliance to switch on and off. In some cases, the switches did not work reliably and one of them made the horrible sizzling sound that you mentioned on more than one occasion.

I am quite convinced that had I plugged the appliance in and walked away, it could have started a fire or at the very least, we would have had a horribly melted mains socket.

Unfortunately, it seems that enforcement of Australian electrical standards appears to be practically non-existent. We find it hard to believe that these products would meet the relevant standards, if tested. If they do then the standards clearly need to be made more strict.

Fixing fault in WiFi Water Tank Level Meter software

I built two WiFi Water Tank Level Meters (February 2018; www.siliconchip.com.au/Article/10963); one operated fine while the other exhibited random reset behaviour. Although these resets were more of a nuisance nature, they did result in one reporting update to ThingSpeak being lost.

Eventually, I traced the resets to the wifi.forceSleepBegin() function. This was triggering a soft WDT (watchdog timer) reset. I have attached the abbreviated serial monitor output (below) that captures this event. Note the reporting update error following the reset:

NBN speed affected by modem power supply rating

I Just discovered something that may help out with your readers' NBN speed. I have 25Mbps fixed wireless NBN via Optus and have had problems with the service for over a year, with speeds below 1Mbps at times and dropouts. Optus could not find any problems with my service.

Around this time I had a tenant leave a property I own. When they moved out, they took the power supply to the NBN modem, which is also fixed wireless. I tried to get a new one but found that they cost $70!

It's just a regular plugpack but it has an unusual 8-pin plug so most generic replacements will not work. But I noticed that the replacement supplies for sale were rated at 2.5A while the one I have at home is rated at 2A.

So I found an old laptop power supply rated at 12V/4A and came up with an adaptor plug. Only two of the eight pins are used so it was an easy fix, although I could not find an 8-pin plug like that anywhere so I had to jury-rig one up.

With the new power supply, I now get around 20Mbps, faster than it has ever been. The power supply I received initially is obviously completely inadequate.

My wife tells me the home phone also works properly now. I can now also watch Netflix without buffering. Why the original power supply is inadequate is a mystery to me.

Warrick Smith,
Numurkah, Vic.

Get in touch with the power of ten.

Call us today for AUD pricing Ph: 02 8874 5100

Discover the R&S®RTB2000 oscilloscope (70 MHz to 300 MHz):

- 10-bit ADC to see more signal detail
- 10x memory to capture longer time periods
- 10" capacitive touchscreen for easier viewing

Oscilloscope innovation. Measurement confidence.
www.rohde-schwarz.com/RTB2000

sales.australia@rohde-schwarz.com

ROHDE&SCHWARZ

```
Uploading data...
Done.
Soft WDT reset
ctx: cont
sp: 3ffefe60 end: 3fff00a0
 offset: 01b0
ets Jan 8 2013,rst cause:2,
 boot mode:(3,6)
ESP8266 in normal mode
WiFi connected
192.168.1.65
Wake up
Read bmp085
DHT22
Read water level
Done
Uploading data...
Error.
```

I came across a tutorial discussion thread on the web that mentions this bug. See: https://github.com/esp8266/Arduino/issues/4082

Some contributors felt the bug was related to the version of board software used in the IDE. I used version 2.4.1 which I believe is the most recent version.

As an experiment, I substituted the modified WiFiOff() and WiFiOn() functions described in that link for WiFi.forceSleepBegin() and WiFi.forceSleepWake().

Note that you need to include library header "user_interface.h" for this to compile. It has eliminated this issue, at least on my WeMos board.

As I have only tested two boards it is hard to generalise how common this issue is. One of the meters is now in service and it works really well.

One other small problem I noticed was that the meter's DHT22-derived temperature graph displayed -3270°C when the temperature dropped below zero.

I thought that the most likely culprit was the SimpleDHT library used in the source code to derive the humidity and temperature values so I substituted the alternative DHT library and changed the associated references in the code.

That fixed it. I suggest others do the same when building this project.

As an aside, the freezer compartment in a refrigerator makes a good test lab for debugging a problem like this. The metal enclosure did not seem to unduly attenuate the WiFi RF signal; probably a commentary on the construction of modern appliances.

Trevor Woods,
Auckland, NZ.

Comment: we have also observed occasional spurious resets which were due to a noisy or inadequate power supply so if you are experiencing this sort of problem, it is worth trying a different power supply to see if that solves it.

This isn't the first time that an Arduino library or sample code has turned out to be "less than stellar". Unfortunately, when there are multiple libraries for the same sensor/module, it isn't always obvious which ones are buggy (it may be that they all are!).

Elektor's drive to remove noisy LEDs from sale

I saw a letter in the Mailbag section of the May issue regarding LEDs interfering with TV reception (on page 4). I also recently came across this web page from Elektor: siliconchip.com.au/link/aak7

Elektor, in combination with the European Federal Network Agency, is asking readers to send in any LEDs which they suspect are causing radio interference.

They will test the LEDs and will inform said agency of any which are found to produce excessive interference, in an attempt to get the worst offenders withdrawn from sale.

Joe Raine,
Woy Woy, NSW.

Some good ideas for future projects

I built the SILICON CHIP Remote Control Automatic Lamp Dimmer (July 2005; siliconchip.com.au/Article/3116), and it is still in (occasional) use today.

The only thing I had to do with it was to replace the 220nF 250VAC Class X2 capacitor recently, as its measured capacity had dropped to 170nF.

Would you consider a new project, a trailing-edge dimmer with similar features, to allow use of an LED bulb?

Also, have you considered designing a mains surge protector? Simple MOV-based systems only seem to protect once, then not at all unless the MOV is replaced (and you have to realise that it's blown). I have seen a concept circuit that describes a self-resetting 16A system; see siliconchip.com.au/link/aaiu

Ian Thompson,
Duncraig, WA.

Comment: these are both good ideas and we are looking into them. We are not sure that any protection circuit can survive a nearby lightning strike and PTCs do "wear out". The proposed configuration may prove more robust than your typical surge protector. We will do some research to determine its effectiveness.

Software-heavy projects are less interesting

I have been a SILICON CHIP subscriber for years. My brother Graham has paid for my sub for years now, which is very kind of him and I read SILICON CHIP cover to cover.

Many of the other electronics projects I see published these days (not in SILICON CHIP) are lacking in details and mostly just describe the software.

I understand that in some cases, plugging a couple of ready-made modules together is the obvious solution but I still like to see circuit diagrams and it's important to understand how the circuit corresponds to the actual components and wires.

Simply giving into ignorance and printing wiring diagrams is not the answer to interesting articles. I see plenty enough wiring diagrams on installation manuals; they are practical and made to get a job done but are useless for extending one's knowledge.

I've been reading circuits for more than 50 years and they read like a story to me. So please continue to publish them. Don't dumb down your articles.

Of course, in professional electronics, systems integration is the rule rather than the exception but that doesn't mean that your magazine has to be that way also. Cute, cunning, careful, clever circuits are the essence of electronics.

Please don't leave them behind. I want you to keep the nicely balanced range of technical content of SILICON CHIP.

We learn by aiming high and challenging ourselves to build something that initially looks tricky, but by hands-on experience, you learn how it works. I like Dave Jones' comment (on his EEV blog) that "My favourite programming language is solder".

I have always read the Editor's comments, although I've enjoyed them far more lately since the focus on electronics returned. Keep up the good work.

Colin Beeforth,
Doveton, Vic.

Nicholas Responds: we plan to keep the editorial direction of SILICON CHIP

FACETT™

BY BLAMEY SAUNDERS HEARS

Inspired by the needs of real hearing aid users, Blamey Saunders hears has created a beautiful device that is easier to use and gives you a new level of control over your listening experience. Facett was made for you.

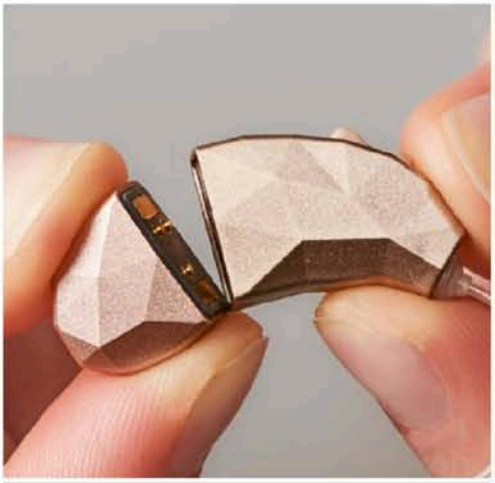

Modular.

High-definition.

Rechargeable.

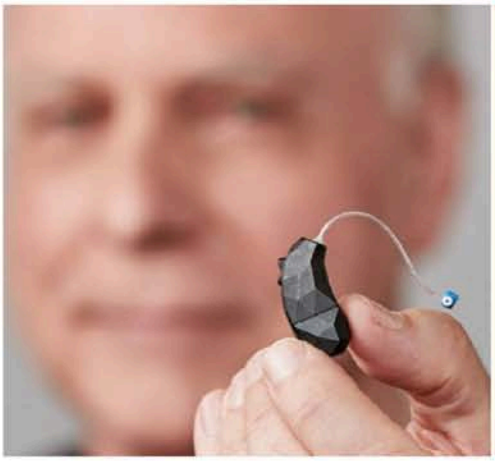

Self-fit.

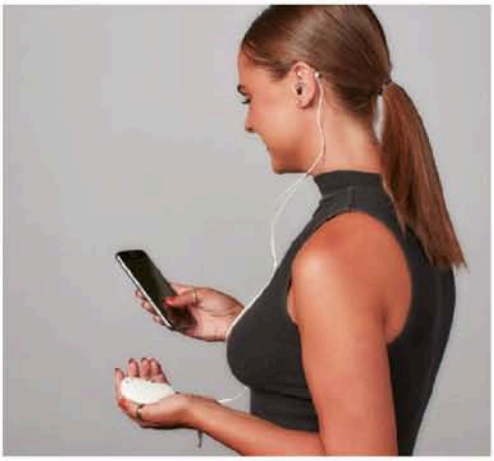

Learn more at

facett.com.au

Wagner
ELECTRONICS SUPER STORE
OVER 40 THOUSAND PRODUCTS
ONLINE 1500+ PAGE CATALOGUE
AUSTRALIA WIDE SHIPPING

AUDIO/VISUAL ACCESSORIES
SPEAKERS / PRO AUDIO
ELECTRONIC COMPONENTS
DATA & ELECTRICAL
TOOLS & TEST EQUIPMENT
BATTERIES & MORE!
BUY ONLINE AT
WAGNERONLINE.COM.AU
VISIT OUR SYDNEY STORE
84-90 PARRAMATTA ROAD,
SUMMER HILL, NSW 2130
02 9798 9233

pretty much as it is, although we recognise that the profusion of really cheap Arduino shield modules presents a great opportunity to do projects which would otherwise be much more involved and expensive.

As you might expect, we are also very conscious of the difficulty in soldering SMDs with very small pin spacing.

In fact, we think that for some future projects we may have to get the PCBs supplied with the major SMD parts already installed as it would be too difficult for DIY enthusiasts. Apart from these considerations though we will definitely continue to produce as many DIY projects as we can.

Arduino-compatible PICAXE board available

In response to the query on "Using Arduino ECG board with PICAXE" in the Ask SILICON CHIP column of the June 2018 issue, I would like to point out that Revolution Education (the originators of PICAXE) sell the AXE401 Project Board which is a PICAXE-28X2 micro on an Arduino footprint PCB.

This allows various shields to be controlled by a PICAXE and programmed in BASIC. I bought mine from Altronics a couple of years ago but I notice they don't sell them anymore. However, they're still available from Wiltronics. See: siliconchip.com.au/link/aak6

For $24.95, it's worth a try.

Peter Ihnat,
Wollongong, NSW.

Learning assembly language programming

The recent discussion of learning to program using the BASIC or C languages (Mailbag, June 2018, pages 8-10) was very thorough but I have a little to add.

I am very "old school" and I often think unkind thoughts about many programming languages. About twenty years ago, I decided to program almost entirely in Microchip assembler. It wasn't easy, but it wasn't unduly difficult either and with the help of a few macros it became easier than the alternatives like BASIC or C.

Although these are easier theoretically, they are so far removed from the machine that I found I was spending more time beating them into submission than programming.

Since then, I've become more theoretical than practical and I've written quite a few macros in Visual Basic within Excel, for example, a Mastermind player, the numbers part of a Letters and Numbers solver and a CD collection manager. VisualBasic continually reminds me of a de Havilland Comet or a Ford Edsel.

Even after buying and reading several expensive books, I find using it a bit like being questioned by the Sphinx, having to answer a riddle to make any progress.

Mostly, I agree with "the language which is taught isn't that important" phrase by Nicholas Vinen, particularly if the list of choices has been whittled down to one between BASIC and C.

I doubt that anyone would recommend programming a microprocessor in COBOL but I read somewhere that the people who built the Airbus use an industrial strength language called "Ada".

For microprocessor developers, page one of my very old C programming manual by Kernighan and Ritchie lists several important benefits of C, including: separate compilation, #include files, and optimum rules defining the scope of the names of variables.

I'm sure that many BASIC systems intended for microprocessors would have these too but Visual Basic programs tend to be all in one lump.

Keith Anderson,
Kingston, Tas.

Nicholas responds: it is definitely worthwhile to learn how to program in an assembly language since it gives you a good understanding of how a processor actually operates.

After all, regardless of what language you use, it is the machine code which actually runs on the processor and does all the work (assembly code is a human-readable version of machine code).

One of the good things about the C language is that once you are familiar with both, you should have a pretty good idea what instructions the C compiler will generate from your C code and thus you can use C as a "cheat" to more easily produce assembly code without having to type it out.

I have written some fairly complex programs in assembly language but ultimately it became too unwieldy and (like most serious embedded/systems developers) I settled on C/

ElectroneX

electronics design & assembly expo

Design, Develop, Manufacture with the latest Solutions!

Showcasing new innovations and technology in electronics

Visit Australia's largest Electronics Expo and see, test and compare the latest equipment, products and solutions in manufacture and systems development.

Make New Connections

- Over 90 companies with the latest ideas and innovations
- New product, system & component technology releases at the show
- Australia's largest dedicated electronics industry event
- New technologies to improve design and manufacturing performance
- Meet all the experts with local supply solutions
- Attend FREE Seminars

Knowledge is Power

SMCBA CONFERENCE

The Electronics Design and Manufacturing Conference delivers the latest critical information for design and assembly. Local and International presenters will present the latest innovations and solutions at this year's conference.

Details at www.smcba.com.au

Free Registration online!
www.electronex.com.au

In Association with SMCBA ELECTRONICS DESIGN & MANUFACTURE CONFERENCE

Supporting Publication SILICON CHIP

Organised by AEE AUSTRALASIAN EXHIBITIONS & EVENTS PTY LTD

Rosehill Gardens - Sydney 5 - 6 September 2018

C++ as the best compromise between performance and speed/ease of development. It's typically smaller programs where the benefits of assembly language programming are greatest.

So while I agree that learning assembly language is good, I would still recommend the use of C/C++ for major projects.

By the way, the reason for the development and use of Ada for military and aerospace is that it is designed to minimise the number of bugs in the software.

I also do not like Visual Basic. It's very clunky and last time I used it (which was some years ago) it was also quite buggy.

PIC16F88 circuit appreciation

Les Kerr's Temperature & Humidity Display based on a PIC16F88, in the Circuit Notebook pages of the April 2018 issue (siliconchip.com.au/Article/11035) piqued my interest, prompting me to build and modify the design (we're stuck on Fahrenheit in the USA).

We use the PICAXE in our Mechatronics instructional program so it has been awhile since I used PICBASIC PRO with a generic PIC. It was very helpful that you included the BASIC source code file in the documentation; without it my task would have been much more challenging.

I just wanted to take a moment to thank the magazine and Les Kerr.

Professor Michael Halbern,
Mechatronics Department,
Sierra College,
Rocklin, CA, USA.

Seismographs recording displacement versus force

Most seismometers (including the earlier SILICON CHIP designs) measure displacement, however the new version published in the April 2018 issue measures acceleration.

This has repercussions which I feel have been glossed over. These variables are related; the rate of change of displacement is velocity, the rate of change of which is acceleration; so it is possible to convert one to the other.

For example, differentiating a displacement signal twice will yield acceleration. This is the equivalent of passing the signal through a two-stage high-pass filter, so it is easy to see why accelerometers favour the detection of higher frequencies.

Energy dissipation in propagating waves of any sort tends to occur on a per-cycle basis, thus higher frequencies lose energy faster than lower frequencies.

We are all familiar with this phenomenon; we hear the full audio spectrum of music when it is played in our living room, but hear only the bass notes of that played at full volume at a party down the street!

It is the same with earthquakes; we experience predominantly lower frequency vibrations from distant earthquakes. Thus we can expect an accelerometer-based seismometer to faithfully reproduce locally generated vibrations such as those produced by passing traffic but should not expect it to detect distant earthquakes.

Tony Ellis,
Porirua, New Zealand.

Comment: It is true that "differentiating a displacement signal twice will yield acceleration" but this is not necessarily equivalent to passing the signal through a two-stage high-pass filter.

A differentiator will filter out low-frequency signals by necessity but a high-pass filter does not always act as a differentiator; that depends on the relationship between the filter corner frequency and signal frequency.

However, you are correct that (with some modelling and assumptions) it is possible to convert between displacement and acceleration.

If you think about how they work, traditional seismographs don't exactly plot displacement of the Earth. Their spring/pendulum systems are affected by both displacement and acceleration (as they have both inertia and a restoring force) and these are effectively combined to produce the plot.

It is also true that spring/pendulum systems have their own time-constants which affect what signals they respond to.

In essence, what we are looking for in the seismograph plot is a proxy for the energy imparted by the earthquake. While the results may not be exactly the same, we believe that the accelerometer will do this admirably.

You are right that higher frequency signals will be attenuated by distance and so local high-frequency vibration sources are likely to be picked up more readily.

This is why our seismograph includes quite drastic low-pass filtering. But we cannot make the corner frequency too low or it will filter out some significant seismic activity.

In practice, we don't think that today's use of accelerometers to record earthquake activity will make much difference to the results. It should make little difference to the maximum g-forces and displacements that are actually recorded.

An idea for a simple DIY electronic wind vane

A little while ago I was pondering the different ways that wind direction sensors are made. I came up with the idea of using a MEMS magnetic compass sensor, which I haven't seen described anywhere else.

You could attach a small funnel to the base of the rotating part of the wind vane, with a small magnet on one side and a counterweight on the other. Then you would position the magnetic compass module centrally under it. This should allow you to sense the relative position of the magnet and thus which way the vane is pointing.

I have not attempted to make one up as I already have a good digital weather vane but thought I might put this thought forward.

Peter,
via email.

Comment: that is a good idea. Hall effect sensor(s) could also be used but the magnetic compass may be an easier solution.

Agricultural robots and autonomous vehicles

The June issue of SILICON CHIP certainly was a pleasant surprise for me as I enjoyed the agricultural robot article by Dr David Maddison. I am not saying that the rest of the magazine wasn't of interest but the robot article certainly grabbed my immediate attention when I first saw it. It is always so nice to see robotic technology being used for beneficial purposes.

However, I am curious as to why you used the term "overlords" in your Editorial Viewpoint. Every one of those robots and I believe every one of them into the near and medium future will use "weak AI" if they use AI at all. The majority of them will have the intelligence of a retarded ant.

They couldn't "lord" over anyone. In fact, my biggest worry is that the software will be so "brittle" that the

PCBCART

Exceptional, Cost-effective
Full Turnkey PCB Service
from China's most experienced provider

With 10+ years' experience serving tens of thousands of international clients, our expanded custom PCB manufacturing, assembly and parts sourcing capabilities allow us to fulfill almost all kinds of PCB needs at reasonable price.

We insist each electronic project (including those still at prototyping stage) deserves superior quality PCB services, that's why we follow the strictest quality standards during production. Got a project ready to bring into reality? We're happy to discuss.

ISO 9001 SGCC · Pb LEAD FREE · UL

WWW.PCBCART.COM

sales@pcbcart.com

initial robots will perform poorly and give the technology a bad name.

It is very nice to see letters in the Mailbag section on different subjects. In one, Andrew Pullin made some good comments about driverless cars and I would like to add to them.

Aside from the extreme technical difficulties of implementing a control system for a driverless car, can we rely on the car companies to design in our best interest? There have been numerous instances where car companies have known about safety problems and have done nothing about them. They have shown little regard for our safety.

If they have avoided correcting relatively simple problems, why should we expect any better when they are confronted with difficult recognition and decision software problems which will almost certainly occur.

However, for those who do not want driverless cars, there is one industry sector that will definitely work against the deployment and that is the insurance sector.

Unless the insurance companies do a special deal with the car companies, driverless cars (with no driving history) should rate at least the same as inexperienced teenage drivers and more likely worst.

In other words, the insurance premiums should be higher, much higher, until the technology has been proven. And, of course, this applies to any new technology which could cause harm and which has no history to justify claims of safe operation.

George Ramsay,
Holland Park, Qld.

Nicholas responds: the title of my editorial was intended to be a "tongue-in-cheek" reference to the concerns about AI run amok that inevitably crop up when discussing these sorts of topics. It is a variation on a famous quote from the 1977 Science Fiction film "Empire of the Ants", which was based on a book by H. G. Wells.

Increased difficulty obtaining parts from overseas

I recently heard that, starting on 1st July 2018, all imports of less than $1000 would be subject to GST. I have also heard that organisations like eBay and Amazon would then stop people in Australia from buying things from overseas websites and we would all be re-directed to the local websites.

As a home brewer of equipment and a restorer of old broadcast and military gear, as part of my Amateur Radio hobby and my activities with the HRSA, I have found that the local sites just don't have the bits and pieces that I need. I find I mostly need to buy from the USA and UK sites of eBay and Amazon.

This is a real threat to our hobby and to anyone involved in electronics.

John Eggington,
Upwey, Vic.

Reponse: eBay has stated that they will continue selling to Australian customers and will be collecting GST. However, Amazon USA will no longer allow items to be delivered to Australian addresses, and will redirect Australians to ***www.amazon.com.au***

www.ustooz.com *could be one way around that. They are based in the USA and operated by an Australian. You send your order to them and pay a small premium and they will use an American freight company to send the product to you.*

They accept PayPal and will soon have a credit card payment option. At present, most of their customers pay Australian dollars via free bank transfer to a business account held at the Bank of Queensland.

*Australia Post also run their own forwarding service from the US, called ShopMate (****https://shopmate.auspost.com.au****). There are also a variety of different forwarding companies for different countries, which you can find online.*

In the near future some websites might even require you to use a proxy purchasing service or VPN to buy items from them, due to geoblocking.

Modern vehicles can have short battery life

In the March 2018 issue, a letter by H. Wrangell titled "Some Vehicles Charge Their Batteries Sporadically" described a battery charging issue with Mazda 2 models. The same defect is present in Toyota 86 GT cars and probably also in other Toyota models.

When a vehicle battery is undercharged to the point where there is barely sufficient charge to start the engine, the alternator will deliver about 20A at 14.45V for a minute then reduce to about 4A for a couple of minutes then taper off to nil with the voltage across the battery falling below 13V.

There is therefore no possibility of ever fully charging the battery when driving and probably many batteries are prematurely replaced in such vehicles.

A new battery will then perform well until the car is left unused for a week or two, when the normal current drain by the vehicle of about 4Ah per day (when parked) will leave the battery with a seriously low charge.

The charge rate is probably controlled by software in the car computer. If this could be modified to have the alternator supply a constant 14.4V (as has been the norm for vehicles for many decades), the problem would be solved. Another solution is to regularly connect a battery charger to top up the battery.

One Toyota dealer I know of even installs a 12V socket under the front number plate to facilitate convenient charging without opening the bonnet.

Bob Hambling,
Cornubia, Qld.

Comment: we can only imagine this is done to make fuel economy figures look better in government-mandated testing, by reducing the load on the alternator. It certainly won't save consumers money as the few dollars saved in fuel is much less than the cost of replacing the prematurely dead battery. Despite battery recycling, it's probably worse for the environment too.

Improved tuning knob for Super-7 AM Radio

I thought you might be interested in how I attached the tuning knob to my Super-7 AM Radio. I started with a blank PCB, then I drilled a 1/4-inch hole in it and shaped it to fit exactly in the centre hole of the clear plastic disc.

I soldered a short piece of copper tubing to the PCB copper side, then I glued it to the clear disc and glued that to the black knob supplied with the tuning capacitor.

This meant that I could insert a thin Philips screwdriver in the tube and fix the whole lot to the tuning gang spindle. I then found an old-style 35mm black knob with a grub screw and fitted that to the copper tube. In future, by removing the knob, I can easily remove the lot from the tuning capacitor.

Ray Wilkes,
Menora, WA.

Articles on Home Automation

As a long time subscriber and reader

Power tool project idea

I have an idea for a project which can't be done with a phone app! I could use a load-sensing switch to power a vacuum cleaner when using my table saw, router or band saw, to keep the dust under control. When the saw is running, the vacuum would automatically be switched on.

Ideally it should work with 110-120VAC as well as 220-240VAC so that it could be used worldwide and should be rated to switch up to 20A. I don't think it should incorporate any kind of switch-off delay since the vacuum noise could mask the sound of the saw spinning down. You need to be able to hear that it's still spinning to avoid injury from accidentally touching a still-spinning saw blade.

My own working solution at home is very simple; I have wired up a Dell laptop plug-pack (19V DC) in parallel with the motor of my power saw which drives the coil of a 24V relay that switches on the vacuum cleaner. It's crude but it works. A proper kit for doing this, which avoids the need to open up the saw, would be great.

Ciril Kosorok,
via email.

Comment: that is a good idea. Load-sensing power boards are available but they are normally designed for equipment like computers and amplifiers and may not be able to handle the power of a large vacuum cleaner.

Our Soft Starter for Power Tools (July 2012; siliconchip.com.au/Article/601) has most of the circuitry needed for such a device. It may be possible to modify that PCB to do the job.

of various electronics magazines since 1970, I have an article suggestion. You may want to consider introducing an article on DIY home automation.

I have been playing with Hassio on a Raspberry Pi (see www.home-assistant.io/hassio/). This free and open source project has a robust architecture based on MQTT (Message Queuing Telemetry Transport) messaging with a built-in MQTT broker, configurable via a markup language (YAML), so no programming is required.

This then allows any MQTT client or service to be monitored, controlled or automated.

Applications include environment monitoring (temperature, humidity, pressure etc), mains power switching, mains power/energy monitoring (https://guide.openenergymonitor.org/technical/resources/) as well as links or bridges to proprietary systems like Google Assistant, Amazon Alexa, Apple, Z-Wave etc.

It can also connect to the Australian Bureau of Meteorology to track weather observations.

As well as downloading the local BOM weather observations, my current set-up monitors local temperature, humidity and pressure. I have also played with mains switching. For both of these applications, I use Tasmota software (https://github.com/arendst/Sonoff-Tasmota) which supports generic and commercial ESP8266 devices with MQTT messaging.

My DIY sensors use WeMos boards and the mains switching can be achieved with Sonoff switches (less than $10 on eBay or you can buy locally) that have been reflashed.

Tasmota software is incredibly capable and is configured via some minor code changes but with the majority of it via a web page configuration interface.

You could start the series off by just getting the RPi running on the BOM weather observations and expand it to do other things month by month. Anyway, something for you to consider.

Richard Audsley,
Eastwood, NSW.

Thermal equilibrium and black body radiation

I would like to challenge some of your thinking about black body radiation written in the last four paragraphs of the insert headed "What is a Thermopile" on page 17 of the April issue of SILICON CHIP.

You say that to accurately know the temperature of an object based on infrared energy, you need to know the emissivity and divide the temperature by this value.

You point out that emissivity of a typical room is high enough to not worry too much about the value of the emissivity, but you go on to say we suggest you don't point the IR window at very shiny objects.

If the IR sensor was in deep space or the walls of the room were -273°C there might be some justification for some of this thinking but this is not what happens to objects in thermal equilibrium.

Regardless of the value of the emissivity of objects located in a room, when thermal equilibrium is reached, provided no energy is entering or leaving the room, all of the walls and all of the objects in the room will settle to exactly the same temperature.

Provided the temperature is not absolute zero then all the walls and all of the objects will radiate IR energy ac-

cording to the laws of radiation which most certainly includes the emissivity coefficient.

But what happens in thermal equilibrium is that every surface is shining IR energy onto every other surface, and every surface is absorbing IR energy from all the other surfaces.

There is a vast churning of energy, for example, in a 3m x 3m x 3m room, if all the walls and ceiling and floor were at 20°C and were behaving as almost black bodies then the total radiation from all these surfaces is about 22kW.

Radiation of that power is shining out from all these surfaces and shining on to all the other surfaces But, at the same time, 22kW is being absorbed by the very same surfaces.

So if equilibrium has been reached, then the temperature remains the same. There is no rule that says this is what is happening but rather this is in fact the very basis of what is meant by the temperature of something.

If the thermal behaviour was according to your thinking where the thermocouples in the IR device saw different temperatures of objects depending on their emissivity coefficients, that is where the shiny objects were seen to be cooler than the sooty black ones then you have hit pay-dirt in that you have just invented a perpetual motion machine.

All you need is a mirror looking at a sooty black surface, the mirror gets to be colder than the black surface and then if you organise a heat engine to run between the hot black surface and the cooler shiny one then you can look forward to riches beyond anyone's understanding.

During my days on university staff, I regularly was asked to see inventors of perpetual motion devices. Many involved misunderstanding the nature of thermal equilibrium.

It does matter what the sensor looks at. If it looks a cold window or if it looks at a hot surface then the sensed temperature will not be representative of the room.

But provided it looks a surface which is representative of the room's temperature, then it does not matter if the surface is shiny one with a low emissivity or a black one with a high emissivity, the sensed temperature will be the same as the temperature of the object.

Dr Kenneth E Moxham,
Urrbrae, SA.

Comment: of course you are right that if you point a non-contact temperature sensor at a mirror which is reflecting the infrared emissions of a black body at the same temperature, you will get a correct temperature reading.

But we think you've shot yourself in the foot a bit (rhetorically speaking) when you say "provided no energy is entering or leaving the room, all of the walls and all of the objects in the room will come to exactly the same temperature."

It's kind of like that old joke of the physicist who claims that he can predict the winner of a horse race, with his proof starting "Assuming the horses are all frictionless spheres moving in a vacuum..."

If no energy is entering or leaving the room then there would be no need to use a heater and therefore you would not build the heater controller! The heater is being used to make up for heat that is leaving through a window, under a door or by some path.

ELECTRIC BIKE BATTERIES

Premier can repair and replace worn cells in older batteries with new cells giving greater capacity and run time, including all 24v, 36v and 48v batteries, with high rate Sanyo or Samsung cells. New custom batteries are also available.

FLAT CAR BATTERY?
WE HAVE THE PERFECT SOLUTION

Dont wait for a new expensive battery! The jump start battery is light, small and will start your car where ever you are.

- NO WAITING
- EASY TO USE
- POWERFUL
- STORE IN GLOVE BOX
- CLIP ON AND START

ALSO CHARGES YOUR PHONE!

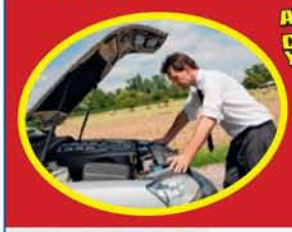

Lithium ion

Features
- Light – with the highest energy density gives you long duration with small size
- Long Lasting – cycle life of 500cycles
- Protection – circuits to prevent overvoltage or under voltage or short circuits
- Custom made – packs to suit your application

Lithium ion Phosphate

Features
- Light – less than half the weight of lead acid
- Long Lasting – cycle life of over 2000cycles
- Deep cycle – can be deep cycled without loss of performance
- Protection – circuits to prevent overvoltage or under voltage
- Custom made – packs to suit your application

PB PREMIER BATTERIES
High quality batteries for all professional applications
Email: info@premierbatteries.com.au Web: www.premierbatteries.com.au
SUPPLIERS OF QUALITY BATTERIES FOR OVER 30 YEARS

Unit 9, 15 Childs Road
Chipping Norton NSW 2170
Tel: 02 9755 1845

That implies that some part of the room is colder than average. If the shiny object is reflecting that part of the room and you point the temperature sensor at it then you will not necessarily get the correct reading. The temperature difference between a warm room and a cold window can be quite significant.

You are right that this is unlikely to be a significant problem, especially since this IR sensor has a fairly wide field of view, so it will effectively be averaging the temperature of a number of objects in the room.

While your analysis is technically correct, we still think our advice to avoid shiny objects was justified, especially since it was general in nature.

CD sound quality is too good to be enjoyable

Having acquired my first new vinyl record in twenty-six years, courtesy of a friend's generous gift, I eagerly played it to hear what a modern record sounds like. Not much difference from the olden days, although I own a much better turntable and phono preamplifier now.

Since then, the price of records has become ridiculous, with CDs becoming quite reasonably priced. By the time of the demise of records, the CD version of an album cost double the price of a record or cassette.

Listening to that new record gave me an idea for a project that might be popular with the many people who rave about the sound of vinyl, citing its "warmth", "purity" and other snobbish superlatives.

In the tradition of "valve sound" simulators, it would be a circuit that could be connected into the analog audio line between a CD player (or other source) and amplifier which would insert some sampled snap, crackle and pop, accompanied by a simulation of the grinding noise of a diamond being dragged across PVC.

As an option, the circuit could also be fitted with a switch that would insert some extra wow, flutter and distortion to simulate the cheap turntables that have sprung up in stores in great number in recent years.

Such a circuit would allow people to save money by continuing to buy cheap CDs or use streaming services, instead of stupidly priced records, and still get all the extraneous noise that seems to be unavoidable with even a fastidiously kept record.

I'll be sticking to optical discs or streaming. I've never been one for fads, and won't be reverting to this fad any time soon.

David Barwick,
Mortdale, NSW.

Response: while feasible, if we did build such a circuit, people who turn their noses up at CDs and solid state amplifiers for sounding "clinical" would no doubt find some reason to dismiss it.

After all, the sound will have been polluted by coming in contact with the cold, uncaring digital bits and this will forever taint it, rendering it impure and unlistenable.

Luckily, there is a simpler and cheaper solution. You just need to eat a bowl of Rice Bubbles while listening to your CDs.

The added noise and popping sounds will improve the listening experience immeasurably and the motion of your jaw will add in the distortion which is so obviously lacking. **SC**

oatleyelectronics.com

NEAR WOY WOY ON THE CENTRAL COAST OF NSW

EMAIL: branko@oatleyelectronics.com TEL: 0428600036

EMAIL OR SMS FOR CALL BACK OR MORE INFO

MULTIFUNCTION WATERPROOF 5V SOLAR PANELS

TWENTY 45 x 90mm PANELS (8W) + 4x 1A SCHOTKY DIODES: SP4590 $10
TWENTY 60 x 90mm PANELS (12W)+ 4x 1A SCHOTKY DIODES: SP6090 $18
TEN 80 x 120mm PANELS (10W) + 4x 1A SCHOTKY DIODES: SP80120 $15

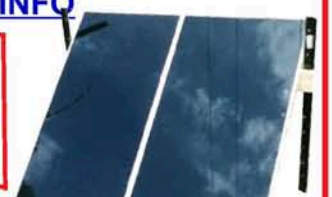

0.5M / 7W/12V LED BARS FOR AS LOW AS $3.33 EA.!

6x 7W-0.5M PURE WHITE LED BARS: IT117PW-P2 $20
6x 7W-0.5M WARM WHITE LED BARS: IT117WW-P2 $20
6x 7W-0.5M BLUE LED BARS: IT117BL-P2 $20

12V – or connect 2 in series for 24V operation

Other combinations are listed on our website

140W MPPT SOLAR CHARGER

PICK UP ONLY:
Two Waterproof Unframed FS272 Solar Panels Plus a Genuine 10A 12/24V MPPT Solar Regulator. Will deliver 10A/5A into a 12/24V Battery IT125.....$139

IT131: SOLAR POWER SYSTEM UNIT

This unit combines a 12V/10A/180W Solar Regulator and a 220V/50Hz/500W Modified Square Wave Inverter, with a Universal Power Socket. Also provided are 3x 12V DC output sockets, 2x Solar Panel input sockets, 1x5V USB output socket, and 2x Heavy Duty Battery connection terminals. Included with each unit are the 3x 12VDC Connecting Plugs and 2x Solar Panel Connecting Plugs: IT131.....$59

0.8m Long Battery Leads: .....IT131 BATT.....$10

ALSO AVAILABLE IS A PACKAGE THAT INCLUDES THE SOLAR POWER UNIT+ BATT LEADS+2X50W (IT120) 12V SOLAR PANELS: $180

THE FARM OF THE FUTURE

... AND THE FUTURE IS NOW!

We saw last month how different the farm of tomorrow will be with dramatic advances in robotic technology already appearing. Two Australian universities demonstrated how they are leading the way in the "Farm of the Future" pavillion at this year's Royal Easter Show in Sydney.

Apart from the showbags and rides (yeah, right!) one of the attractions at The Show was a purpose-built "Nissen Hut" pavilion, under the auspices of the Royal Agricultural Society of NSW, showcasing "The Farm of the Future".

While the exhibits themselves drew a lot of attention from visitors, it was more the technology behind what was being shown and in some cases demonstrated which attracted our attention.

We were particularly impressed by the largest exhibitor, the University of New England (UNE), who brought down just some of their "SMART" Farm applications from its SMART Farm Landscape Laboratory.

It was, in fact, this SMART Farm – and the farm of tomorrow – which we really visited the show to see.

SMART, by the way, is not simply a clever adjective. It's also an acronym which describes their philosophy: **S**ustainable, **M**anageable and **A**ccessible **R**ural **T**echnologies

Of course, the amount they could bring to the show was merely a taste of what they were doing "back on the farm".

It's all part of the UNE's own SMART Farms, 10km northwest of the main UNE campus in Armidale, northern NSW.

In fact, the university has not one farm but eight, for a total of 3820 hectares.

All but one of these are either adjacent to, or a few minutes from the main UNE campus; the 740 hectare Tullimba farm (a 1000-head feedlot) is 40km west of Armidale.

UNE has transformed 'Kirby-Newholme', a 2,900ha commercial farm, into a highly connected landscape or SMART farm which showcases the latest technologies aimed at improving productivity, environmental sustainability, safety, workflow and social/business support networks on Australian farms.

Linked via AARNet and the national broadband network (fibre, terrestrial wireless and satellite) the predominantly grazing SMART Farm is a national demonstrator site.

It also serves as a research, education and outreach facility not only for the SMART Farms itself but for UNE-led global advances in agriculture research and development.

Facilities include a farm 'Command Centre' (shown above), visitor and teaching space with a 52-seat seminar room and offices.

Enhanced ICT and AV infrastructure and technologies give students and visiting researchers access to, as well

by Ross Tester

as hands-on experience with, modern technologies that aim to revolutionise the way farms are managed.

Established in 2002, the University's Precision Agriculture Research Group (PARG) develops new technologies that address current challenges in agriculture, horticulture and natural resource management using expertise from a range of fields.

PARG is a multidisciplinary group of researchers developing innovative, low cost and accessible technology for industry and farmers.

PARG uses the latest sensors and positioning technology to improve efficiencies and cost effectiveness.

PARG not only encompasses the SMART farm but research and development, industry collaboration, sustainable agriculture, WRAIN – Water Research and Innovation Network, even their Research Group for Molecular Biology . . . and more.

In amongst all this, of course, they're educating Australia's (and the world's) rural leaders of tomorrow with techniques and equipment that, in the main, hadn't even been invented (or at least available) last century.

Distinguished Professor David Lamb of the Precision Agriculture Research Group explains the workings and applications of drones.

The SMART Farm

The Precision Agriculture Research Group has five main research themes that covers the work being undertaken on the SMART Farm:

- Smart farms including sensors and sensor networks
- Precision livestock management
- Remote sensing
- Intelligent and autonomous systems
- Healthy agricultural environments

These themes are further divided into many smaller segments, in which the latest in technology, electronics and robotics play a major role.

For example, when they say precision livestock management, it's no longer a case of counting sheep (or taking a guess!) – with each animal now fitted with an individual RFID tag.

For some research projects individual sheep have various sensors that are used.

They could not only tell the farm operator how many there are but where they are – and even if there are any health problems with any particular animal.

In intelligent and autonomous systems, as you might expect, drones are taking on an ever-increasing role.

There are drones now which can even identify weeds within a crop and very accurately target those weeds with poison – with limited human intervention (if at all).

Other drones and unmanned vehi-

Current UNE SMART Farms Research:

- sheep and cattle genetic and nutrition research
- animal behaviour and welfare research
- dog nutrition
- poultry nutrition, production and welfare research
- pasture management
- natural resource management
- water resource flow research
- native animal research
- agro forestry
- agronomy and horticulture research
- mixed farming systems research
- soil moisture and crop yield mapping
- cattle grazing behaviour research
- crop variety development
- precision agriculture research
- forestry and pasture establishment and production research

cles (some of which were on display at the show) can make their way along a crop and fertilise it.

Wireless is becoming increasingly more important on the land. We've seen wireless technology used to monitor dam and water storage levels with automatic action (eg, opening or closing valves) where required.

We've seen similar technology used to monitor the status of farm gates – and in some cases, either automatically or on command open or close them.

That's all regarded as "ho-hum" these days – indeed, several projects published in SILICON CHIP over the years could allow those with even limited electronics knowledge to achieve much the same thing.

For example, many of our rural readers have told us how useful our WiFi Water Tank Level Meter has been (February 2018; siliconchip.com.au/Article/10963)

But one of the SMART Farm applications demonstrated by UNE had wireless monitoring of eucalypt trees – these types of sensors are also being used by PARG researchers in tree crops.

Sensors ARE actually attached to each tree, with central reporting as to the health of the tree – telling operators if the tree is lacking water, stressed, attacked by parasites, and so on. They can even tell if a crop is ready for harvesting by information sent back.

These are just a tiny sample of the agricultural research and development being carried out at UNE.

Some of the other more esoteric include:

- the remote monitoring of livestock (they even have stock walking over scales which report that animal's weight at that time);
- an on-animal sensor system which allows graziers to spatially and temporally monitor the animal's health and welfare status automomously;
- remote water tank monitoring to directly access stock water levels . . .
- and they're even involved with nano-satellites, developing an ultra-low-cost remote connectivity platform.

SILICON CHIP has published features on both nano-satellites (January 2018 – siliconchip.com.au/Article/10930) and the internet of things (IoT) (November 2016 – siliconchip.com.au/Article/10425).

While not specifically related to agriculture uses, these articles both demonstrated the direction such fields are taking.

Leading in education

SMART Farms aren't only about research programs and training university students.

The SmartFarm Learning Hub connects teachers and students to industry and technology through their growing catalog of free learning modules.

As a living landscape laboratory in a commercial farm setting, there is the opportunity for education on agricultural systems and cutting edge research across a range of disciplines. The proximity to a variety of soil, vegetation and land use types also facilitates this.

With dedicated programs for secondary students interested in precision agriculture and agtech and its applications in farming systems, the SMART Farms provide a great starting point for agricultural education. This is followed through into tertiary and higher degree studies.

With large areas of undisturbed vegetation, the Farms are ideal for hands-on experience in natural resource and environmental studies and the interaction of these with agricultural systems.

Drones

We mentioned drones (UAVs) a little earlier. Alongside their burgeoning use in the wider world for "serious" applications (see SILICON CHIP, May 2018, for example) they're making

Fashion accessories for sheep? Research animals fitted with a transponder which monitors its health and location in real time – and transmits the data back to base.

The "SMART Farm Innovation Centre", near Armidale in Northern NSW. As well as operating a working farm, it has the facilities for education, training and management.

Yamaha's unmanned 2705 x 720mm, 100kg RMAX helicopter. It is seen here spraying a crop from its onboard twin 8-litre liquid tanks (it can also be fitted with twin 13-litre granular tanks). Spraying is usually carried out 3-4m above the crop. The RMAX, fitted with a 246cc petrol engine, can be flown for up to to 1 hour before requiring refuelling (depending on weather conditions and payload). A CASA licence is required to fly the RMAX and it is currently is limited (by CASA regulations) to a height of 120m/400 feet and a maximum speed of 40km/h.

serious inroads into a wide variety of applications in agriculture.

That can be as simple as observation /surveillance to much more active crop and stock control and management.

A significant amount of the research and practical work being undertaken at Armidale involves the use of drones to make farm life much easier; indeed, undertaking some tasks which would have proved impossible or way over-the-top on a limited farm budget.

Their UAV research includes low-cost, high-quality 3D crop monitoring. Until now, this hasn't really been possible – unless full-sized aircraft were used, making the whole thing uneconomic.

They're also building applications for UAVs to support field data collection, developing new sensors and image-calibration systems, involving satellite images as well as UAV images.

While city-dwellers might think of "drones" as those annoying little high-pitched and intrusive "toys with cameras" that have so disturbed the privacy crowd, drones used on farms can range from those (maybe not so intrusive!) to much larger and much more capable.

It doesn't have to cost $$$

Small, hobby-type drones were on display at the Royal Easter Show from a number of sources, mainly intended for a farmer to "fly" over the property from the comfort of home, while viewing everything that the on-board camera is able to show.

These were the starting point: further developments (in optics, software, etc) will enable crop and pest identification. More advanced drones also incorporate the ability to treat crops/pests (eg, fertilise or poison) by remote control.

But wait, there's ~~more~~ BIGGER!

While not part of the UNE display at the show (but in the same pavilion) a company more familiar to readers as a motorbike and outboard engine manufacturer, Yamaha, displayed their

One of a number of automatic weather stations at the UNE SMART Farms streaming live weather data.

A lot of the on-farm systems – gate open/closed, for example, are solar powered with direct data transmission via radio.

University of Sydney's solar-powered "RIPPA" (Robot for Intelligent Perception and Precision Application) in a static display showing how it can autonomously travel up crop rows without damaging them, at the same time selectively weeding and/or fertilising etc. Inset above is RIPPA in action, working on a field of beetroot near Cowra, NSW.

monstrous RMAX UAV helicopter (as seen above).

It almost looks like someone could fit inside, at nearly 3m long (by way of contrast, the 2-seater Robinson R22 is less than 9m long!). The RMAX has a rotor span of more than three metres.

Unlike most drones, the majority of which have enclosed or protected rotors, a helicopter of this size would be capable of doing some serious damage if not controlled properly, hence a CASA commercial UAV licence is required.

Because flying a helicopter UAV is arguably more difficult than flying a typical drone (even though it has some highly sophisticated computer/GPS/etc control built in), Yamaha can provide instruction right through to the CASA licence.

The RMAX can be fitted with a variety of payloads, eg, a high resolution camera (with real-time radio feed) either liquid or granular fertilisers, poisons etc.

While agricultural drones abounded in the Farm of the Future display, we were particularly impressed with the Yamaha RMAX (if only for its "wow" factor!) More info: www.yamaha-motor.com.au

Incidentally, you will note on their website that you can't buy a RMAX – they are only available for lease.

Robotics

Both the University of New England and Sydney University had displays featuring the already-existing use of robots on farms.

Sydney University's Australian Centre for Field Robotics (ACFR) is one of the largest robotics research institutes in the world, focussing on research, development and application of autonomous and intelligent robots and systems for use in outdoor envrionments.

At the Sydney University display, we were able to examine several USyd rural robotics developments:

Swagbot is a research robot for work on grazing livestock farms and is currently the only such robot in the world designed to do this.

It is capable of navigating extremely difficult terrain and is designed with a number of uses in mind including livestock monitoring, herding and detecting and spraying weeds.

In addition, it can tow a trailer to deliver feed, supplies, etc. In one example of it use for weeding, it has been taught to recognise using machine learning the characteristics of the noxious weed African boxthorn and to autonomously find and destroy it.

RIPPA with VIIPA (Robot for Intelligent Perception and Precision Application) is another Australian robot designed and under development by ACFR intended for use in the vegetable growing and orchard industry.

It is able to autonomously follow and change to different plant rows, undertake machine learning, perform 3D image reconstruction, autonomously perform mechanical weeding, per-

RIPPA in another mode: working in an apple orchard near Three Bridges, Vic. The split photo on the right shows that RIPPA has identified apples which are then individually and automatically sprayed. Later variations will have fully automated harvesting – eventually most current farm labour-intensive tasks could be carried out by robots.

form precision fluid delivery such as herbicide or fertiliser and perform autonomous soil sampling and mapping.

RIPPA is equipped with solar panels for recharging its batteries. Most recently it has being taught to recognise pests such as snails or beetles on various crops and kill them.

For fluid delivery it is equipped with **VIIPA** (Variable Injection Intelligent Precision Applicator).

Ladybird is primarily designed as a research platform to acquire crop data and is equipped with numerous vision sensors such as hyperspectral, thermal, infrared, panoramic vision, stereovision with strobe, LiDAR as well as GPS.

It is battery and solar powered and can make various assessments about crop health and yield. It can create 3D imagery of an entire crop at high resolution and this also allows the identification of weeds and estimates of crop yield.

The Digital Farmhand, again under development by ACFR, is designed to perform crop analytics as well as provide automation of a number of simple farm tasks.

Like a tractor, this robot can also tow a number of different implements such as a sprayer, weeder and seeder

As well as their "wheeled" robotics, Sydney University has reported significant breakthroughs in UAV robotics.

They have built a UAV surveillance system to detect aquatic weeds in inaccessible habitats and used UAVs to detect, classify and map infestations of wheel cactus over large areas of outback Australia.

They have also used a lightweight hexacopter to detect alligator weed infestations and used a J3 Cub unmanned plane (UAV) to detect and map various species of Woody Weed in northern Queensland.

QUT's Agbot II

We haven't even looked at the extensive work being undertaken by many other Australian universities (they weren't at the Sydney show!) but some of the work of the Queensland University of Technology (QUT) bears mention.

They claim their 600kg agricultural robot Agbot II (seen at right), could save Australia's farm sector $1.3 billion a year by reducing the costs of weeding crops by around 90%.

Agbot II's sensors, software and other electronics enable it to navigate through a field, detect and classify weeds and then kill them either mechanically or chemically.

The robot can also be used to apply fertiliser.

In trials, the vision system operated with 99% accuracy in the classification of the correct weed species based on the images collected by the robot cameras.

Future versions of Agbot II could also feed back data on such things as soil and crop health and the state of diseases as they conduct their operations.

This would enable better management decisions driven by paddock specific, real-time information.

AgBots are designed to work in groups, which increases the reliability of weeding operations. If one robot has a problem and fails, the others continue operating.

This is not the case with a single tractor or single sprayer operation.

Agbot ll is solar powered at present, which is better for the environment and the farmer's budget.

Development of equipment in the laboratory – such as the multi-rotor aircraft seen here, for example, ends up in as part of the research in the field.

University (and other) websites

If you're interested in a career in agriculture, or even just find out what our universities are doing, all have quite extensive websites which you can surf through as you wish.

The three main ones we've looked at here are:

University of New England – www.une.edu.au

Sydney University – https://sydney.edu.au

and the Queensland University of Technology – www.qut.edu.au

Teachers and school authorities can also discover what an association with universities can do for their students.

Finally, there is also a wealth of information on manufacturer's websites covering the exciting area of rural robotics and equipment – an area that will only burgeon in the future. SC

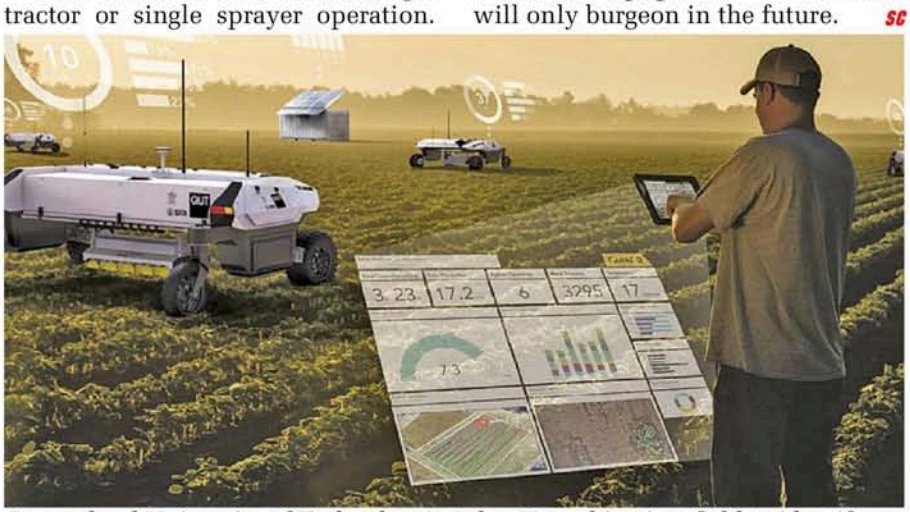

Queensland University of Technology's Agbot II working in a field to identify and destroy weeds, which it is claimed to do with 99% accuracy.

ALTRONICS

Build It Yourself Electronics Centre®

July

DEAL OF THE MONTH!

SAVE 33%

D 2039 **$50**

Brilliant Wireless Bluetooth® Sound

Ask for a demo in-store.
Great for the outdoors, fits into your backpack with ease. 5 hr playback time with 4000mAH internal battery bank. Includes USB lead for easy charging (M 8862 USB wall charger, $16.95) 268x70x100mm, 840g.

$26.95 X 3271 Natural White

NEW!

Accessories
X 3273 Straight joiner $3.50
X 3274 Right angle joiner $3.50
X 3277 PIR motion switch $16.50
X 3275 Touch dimmer On/Off switch $6.95

Modular Aluminium 4W LED Strips

Perfect for lighting inside cabinets, under shelves, wardrobes etc. Utilises high efficiency SMD 4014 chip LEDs. Use at home or in cars, caravans and 4WDs. 39Wx8Hx300Lmm. Join up to 5 strips together using joiners. 12V input, 500mA per strip.

NEW!

X 0668 **$119**

Compact UHF Walkie Talkies

Brand name performance & features for a fraction of the price! Includes handy charging dock. Great for keeping in touch at building sites or rural properties. Up to 10km range with 2W transmission power. Includes rechargeable batteries and earpiece headsets.

TP-Link® Smart Wi-Fi Bulbs

Control your home lighting from your smartphone or Google Home/Amazon Echo. Available in dimming, colour adjustable white and colour adjustable RGB types. You can even schedule lighting to save energy. Suits screw and bayonet fittings (via adaptor).

Type	Model	ONLY
Dimmable White 7W	X 2188	$49
Tunable White 10W	X 2192	$69.95
Tunable Colour 10W	X 2194	$99

$17.95

NEW!

A 0289

USB Li-Ion Charger

This high performance battery charger features USB charging allowing you to stay powered up anytime, anywhere. Works with 10440 to 26650 size cells.

Answer the door even when you're not home!

Wi-Fi Video Doorbell with smartphone app control and 2 way audio.
This stylish doorbell connects to your wi-fi and notifies your phone when a person arrives at your doorstep. Great for telling the postie where to put your Altronics purchases until you get home. Can be used as a live monitor, detects motion outside your home and can even remote unlock your door (when used with a suitable doorstrike). Includes power supply.

NEW!

$199 S 9455

SAVE 30%

ipad for illustration purposes

$16 D 2206 Headrest

Bargain Universal Tablet Holders

Features secure springloaded arms for tablets up to 12.9" in size. Adjustable ball joint design. Ideal for navigation or keeping kids entertained on the road.

D 2204 Windscreen **$20**

NEW!

A 4201 **$199**

Bluetooth® 2x50W Amp

Stream audio directly from your device to your speakers in the study or entertaining area. 3.5mm and RCA inputs. Class D design. Internal headphone amplifier.

$19.95

NEW!

A 0290

USB NiMH/NiCad Charger

Charges 4 x AAA/AA cells via USB. Great for use at home or in the car. Use rechargeables & save batteries from landfill!

SAVE $20

$89 D 2815

All your home entertainment in one box.

Stream direct to your TV from your favourite services such as Netflix, Stan, YouTube and more! Capable of streaming stunning 4K videos @ 60fps! Requires 2A USB power supply. Pair it with our A 0981 wireless keyboard/trackpad for $29.95.

NEW!

$31.95 D 2326

Say goodbye to charging cables!

This ultra-slim pad suits Qi wireless charging enabled devices (such as the iPhone 8 & X). Includes USB cable, requires USB wall charger, such as M 8862 $16.95. *Phone for illustration purposes.

Get a close up view with a desktop microscope

X 4306

SAVE $59 **$230**

This high resolution 12 megapixel USB micrscope allows close up inspection of just about anything! USB PC interface, plus HDMI output for monitor connection. 220x magnification with 10-50mm focal length. In-built 2.4" LCD.

USB Clip On 5x Magnifier Lamp

Clips to any desk or bench in an instant! The latest Inspect-A-Gadget magnifier is powered by a USB port and provides a crisp, clear view of your workbench. 430mm long. 1.5m USB lead.

$30 X 0435

SAVE 24%

2 for $18 S 4704A 4pk x AAA

2 for $36 S 4708A 4pk x AA

Ready to USE Rechargeable NiMH Batteries

Pay for themselves in just a few uses! Reduce waste and landfill.

To find your nearest store, visit: www.altronics.com.au/storelocations

Sale pricing ends July 31st 2018.

TEST & MEASURE FOR LESS...

Super-Tough DMM. Built like a tank!

This new multimeter is built tough with water and dust resistance, plus an impact resistant case for the rough and tumble of every day use in the field. Auto ranging design offers a feature list as long as your arm with a clear large digit backlit display. Includes carry case & test leads. See web for full spec list.

Q 1069

$159

SAVE $40

Do-It-All Multimeter

With in-built AC mains detection.

This is one of the best DMMs we have evaluated when it comes to build quality and feature set. Its perfect for the serious electronics enthusiast, electrical tradesperson or service tech. 3.75 digit display features a LCD bargraph and helpful mode indicators. Includes carry case, temp probe, insulated test leads and 9V battery.

Q 1068

$99

SAVE $26

$252

Q 0205

Amazingly compact handheld 10Mhz oscilloscope!

Velleman® HPS140MK2. Don't let the size fool you, this oscilloscope packs alot of features into a tiny device. A must have for the serious enthusiast of technician on the go! Up to 8hr operation from 4 x AAA batteries (S 4904 lithium $4.95 2pk).

$60

Q 2022

SAVE 19%

'Roadies' Cable Tester

Tests 13 types of leads for continuity. A real time saver! Tests: 6.35mm, DIN (3/5/7/8 pin), RCA, XLR (3/5 pin), Speakon (4P/8P), RJ45, USB & banana. Requires 9V battery (S 4970B $3.95).

T 2090

$59.95

NEW!

Top buy for the beginner or student.

Bargain 40W Soldering Station

The pefect balance of value for money and features for beginners or cash strapped students and enthusiasts. Slim, lightweight non-slip handle with tip cleaning sponge and iron safety holder. Full range of spare tips also available.

Q 1129

$29.95

All-Rounder Student DMM

The perfect beginner, student or enthusiast multimeter. 12 auto ranging test modes with good accuracy and an easy to read jumbo digit 4000 count screen. Includes test leads.

Superb quality for precision electronics use.

T 2749

$44

SAVE 24%

Tungsten 5" Side Cutters

Ideal for cutting solid core steel, copper & piano wire. HRC72° hardened jaws provides 5 times the life of standard sidecutters.

LATEST TOOLBOX ESSENTIALS.

NEW!

$39.95

T 2186A

101 Pc Ratchet Driver Kit

A tool for every occasion! Features 95 security, philips, pozi and slotted bits made from tough S2 alloy. Includes two way ratchet handle with comfy rubber grip. See web for full contents list.

NEW!

$69.95

T 2175A

1000V Rated Insulated Tool Kit

Ideal for technicians working on mains powered equipment. Includes cutters, pliers, wire strippers, 5 screwdrivers plus a neon test driver and 2 rolls of insulation tape - all in a handy carry case.

$39.95

NEW!

X 0432

No more eye strain!

This jumbo 5x loupe with LED lighting provides a crisp clear view of fine print, circuit boards, small parts etc. USB rechargeable. Includes carry case.

T 2065

$169

SAVE $40

Micron® Vacuum Desoldering Station

Designed to desolder through hole componentry, removing molten solder quickly and easily from solder pads and components. In-handle reservoir is easily removed and cleaned. Includes three desoldering tip, nozzle cleaner and filter pads. 160°-480°C.

T 2164

$26

SAVE 20%

Smartphone Repair Tool Kit

Everything you need to disassemble and repair most smartphones and tablets - driver bits, plastic & metal spudgers, suction cup and more! See web for full contents list.

$9.95

T 3014

Wire Glue Compound

Bonds copper conductors together without the need for soldering. 9ml.

$7.95

T 2980A 5mm

$45

T 2982A 50mm

Copper Tape

0.07mm thickness. 15m length. Great for antennas & component traces

Bare Conductive® Paint Pen

Draw real circuits on almost any surface! Great for repairs or experimenting. 10ml tube.

T 3132

$18.95

NEW!

Q 3003

$39.95

Detect lethal AC voltages instantly.

This non-contact probe detects cabling and power outlets with live AC power (100-1000V). An essential preventative tool for trades people. Waterproof case with in-built torch.

GREAT DEALS ON POWER & CHARGING...

SAVE $80

$199

M 8539

Powerhouse® 7 Stage 12V High Output Battery Charger

This new model offers support for batteries up to 300Ah with an output current up to 12A! 7 stage charging delivers the appropriate charge current to maintain best performance & battery life. Can also recover deeply discharged cells. Suits permanent connection, making it great for seldom used vehicles. Auto reconnect starts charging again as soon as you connect the unit to mains!

$299

N 1120

120W Portable Folding Solar Power Kit

Going bush? Have power wherever you go on your next 4WD adventure.

This complete 12V power kit includes 120W panel, solar regulator, battery connection cables & canvas carry case. 3 stage solar charger ensures batteries are alway performing at their peak! Adjustable stand for finding best sun placement. 720x520x70mm (folded).

SAVE $170

$549

M 8312 30A

Wide voltage range and high current output!

SAVE $100

$299

M 8310 20A

High Current Lab Power Supplies

30V bench top power supply for use in servicing, repair and design. The low noise switchmode design offers excellent regulation for high current requirements. Offers the flexibility of both wide adjustable voltage & current range. Size: 336W x 87H x 214Dmm.

SAVE 25%

Mains Power Anywhere, Anytime!

Great for camping, farmers, mobile trades, service vans. • Host of protection features • Soft start • High/low voltage shutdown

Rating	Model	Normally	ONLY
12V 150W	M 8072	$59.95	$44
12V 300W	M 8076A	$79.95	$58
12V 600W	M 8084	$129	$95
12V 1000W	M 8090	$235	$175

SAVE $20

$149

D 0873

750VA Backup UPS & Power Protector

This quality UPS unit will prevent appliance damage caused by power fluctuations, PLUS keep power on during a blackout! Also protects phone lines. 2 year warranty.

D 0511A

$69.95

Latest spec!

QC3.0 High Capacity Battery Bank

Super fast recharging for Quick Charge 3.0 compatible devices. Huge 12000mAh capacity. Dual outputs - USB type C and type A. 150L x 74W x 16Hmm

$17.95

S 9266

Power Over Ethernet Splitter

Allows you to power non PoE equipped devices from a 802.3af Power Over Ethernet RJ45 cable. Eliminates the need for a power supply at the end of the cable run. 12V, 15.4W max.

$119

M 8882

SAVE $40

Charge up to 10 USB devices at once!

Great for families, classrooms and businesses. Massive 19A charging output. Rapid charging 2.4A output on each port. Includes adjustable dividers & power supply.

SAVE 30%

$35

M 8880

5 Way Intelligent USB Charger

'Charge IQ' feature charges a connected device at the fastest speed. 7.8A max current. 110-240V - great for travel. Includes Australian mains lead. 73x73x34mm.

SAVE 20%

M 8627A

$44

Laptop & USB Car Charger

Simply plugs into a car accessory socket. Voltages 15, 16, 18, 19, 20, 22 and 24VDC, up to 120W. Includes 8 laptop adaptors.

NEW POWER GEAR.

SAVE $30

$139

M 8198

Includes air compressor & ultra compact lithium jump starter!

HOT SELLER!

Inflate a flat tyre. Start a flat battery.

A complete auto rescue kit for the car boot. Features a 16800mAh battery bank plus emergency compressor to top up tyres (max 8 mins run time). Provides 600A peak cranking output for cars with flat batteries. 12/16/19V & USB output provided for powering devices.

M 8990A

$89.95

NEW!

Replacement Laptop Supply

Lost your laptop power supply? Or need an extra one for the office? This unit includes mains lead and 10 tips to suit popular models of laptop. Voltage output is set automatically. 5-24V @ 90W max.

Control Appliances Remotely

Works with Google Home & Echo

Switch any connected appliance on or off remotely from anywhere in the world! Set schedules, monitor and control your appliances using the TP-link Kasa mobile iOS/Android app. "Away" mode can give the appearance of someone being at home when you are on holiday.

$54

P 8148

QC 3.0 USB Car Charger

Huge 4.8A output! Ideal for use with QC3.0 devices for ultra fast charging.

SAVE 25%

$22

M 8630

NEW!

$15.95

M 8606

Triple Car Accessory Adaptor

Plus dual USB charger for keeping your devices powered up on the road.

EDUCATIONAL PROJECTS TO BUILD!

K 2208
$99
SAVE $40

130 in 1 Electronics Learning Lab

A comprehensive learning lab with many hours of building. Build a radio, broadcast station, organ, kitchen timer, logic circuits & more. Requires 6xAA batteries (S 4906 lithium 2pk $4.95ea). **10+**

K 1149
$39.95
NEW!

12 In 1 Solar & Hydraulic Kit

A huge parts kit which can be built and rebuilt into 12 different solar powered designs. Hours of fun for kids aged 8 or over (or younger with adult help). **8+**

Arduino Based Line Tracking Car Kit

Construct - Code - Program - Modify

An obstacle Infra-Red avoidance/line tracking car which can be modified, tweaked and upgraded as you level up your skills with Arduino. Bluetooth smartphone control. Great for young builders looking for a challenge! **12+**

$149
Z 6451
Bluetooth controlled!
SAVE $50

$25
SAVE 23%
K 1135

Air Powered Buggy Kit

Requires no batteries, electric motor or any conventional fuel to make it drive. Use the air pump to fill the bottle - let it go & watch it fly! Travels up to 50m. No soldering or special tools required. **8+**

NEW!
K 1148
$47.95

Tobbie The Smart Robot Kit

A six legged robot kit designed to avoid objects or follow you around the room. Easy to build. Interactive AI develops its own emotions and gestures. **8+**

$20
SAVE 40%
K 2546

'Learn To Solder' Zoo Animals Kit

Play with LEDs, battery & bring each of the six animals to life! Contains everything you need to create simple circuits & learn to solder. **6+**

Build it 3 ways!
SAVE 25%
$45
K 1095

3 In 1 All-Terrain Robot Kit

Great fun for the kids to build and play with! This single kit can be built (and re-built) three ways! Lifting capacity ≈100g. Wired remote control.

PARTS FOR MAKERS & INVENTORS

$26.50
Z 6347

ESP32 Wi-Fi & Bluetooth/BLE Module

Provides 2.4GHz Wi-Fi and bluetooth on board for projects requiring wireless control/ data transfer. Requires SMD soldering for assembly.

NEW!
Z 6221
$14.95

Analog-to-Digital ADS1115 16 Bit Converter

A popular high precision ADC for microcontroller designs with 860 samples/ sec over I2C. 2-5V input.

NEW!
$24.95
Z 6333

U-Blox Neo-6M GPS Module & Antenna

Add GPS location to a Arduino/Pi project, aircraft or drone. 3.3/5V logic level. Includes 6x20mm ceramic antenna. Also available as an Arduino shield with active 28dB antenna (Z 6332 $69.95).

$59.95
K 9650
NEW!

Arduino Keypad Plate

Pefect for Arduino based access control, security and automation designs, this handy wallplate has the atmega328p chip on board and is suitable for use with standard shields.

$152
Z 6435
NEW!

Touch Board With Arduino

Makes projects interactive. Create sensors with the Touch Board's 12 electrodes and trigger sounds through its MP3 player. Works with croc clips, copper tape, solder, e-textiles and conductive paint (T 3132 $18.95).

$14.95
Z 6395

Barometric Sensor Breakout

Add air pressure measurement to weather monitoring projects. BMP180 sensor on board. 1.8-6V input.

SAVE 33%
Z 6391
$10

3 Axis Digital Compass

Converts magnetic field to a differential voltage for heading information. 3-5V input.

$29.50
Z 6525

Mini OLED Display

Monochrome 128x64 0.96" display module with very low power consumption. I2C interface. 3.3-5V input.

SAVE 20%
Z 6510
$29

2.8" Touchscreen Shield

A 240x320px touchscreen shield for Arduino utilising the ILI9325 chipset. 3.3V input.

NEW!
$69.95
Z 6430

Pi-Cap For Raspberry Pi®

The Pi-Cap allows the Raspberry Pi to interface to the physical adding precise capacitive touch, proximity sensing and high quality audio to your Pi. Works with croc clips, copper tape, solder, e-textiles and conductive paint (T 3132 $18.95.).

Sale Ends July 31st 2018
Phone: 1300 797 007 Fax: 1300 789 777
Mail Orders: mailorder@altronics.com.au

B 0091

Find your nearest reseller at: www.altronics.com.au/resellers

Please Note: Resellers have to pay the cost of freight and insurance and therefore the range of stocked products & prices charged by individual resellers may vary from our catalogue.

© Altronics 2018. E&OE. Prices stated herein are only valid until date shown or until stocks run out. Prices include GST and exclude freight and insurance. See latest catalogue for freight rates.

"Truly revolutionary . . ."

The PHILIPS Compact Cassette and EL3302 cassette recorder

What are the most revolutionary domestic electronic products of the last 50 or so years? The Philips Compact Cassette – and the recorder/player it was specifically designed to fit – is one that stands out. It changed our way of life immeasurably but few people today would understand how "revolutionary" the Philips Compact Cassette really was.

By Ian Batty

I'm going out on a limb by calling it revolutionary. It's a big claim – but bear with me.

Up until the early 1960s, there had been tape recording in one form or another, since people took it up after Valdemar Poulsen's 1898 demonstration. Continuing development led to standardisation on quarter-inch tape running at 15 inches per second (ips) for pro/studio equipment and slower 7½ and 3¾ ips tape speed for domestic tape recorders.

Using only one side of the tape in one pass allowed users to turn the tape reels over to get double the record/playback time.

Four-track developments allowed stereo and semi-pro four-track operation.

Held on reels similar to 8mm film reels, tapes were exposed to contamination and needed to be hand-threaded into the mechanism for use. But even the smallest portable transistorised units were still quite large, offering playing durations under one hour at modest quality.

In hindsight, with the burgeoning prosperity of the 1960s, someone

was bound to turn the audio world upside down with an economical, portable, high-quality audio format.

And most people would know that the Philips cassette recorder was the result. It was truly innovative but why call it "revolutionary"?

Vive la révolution!

Specifically, it was crucial to the Polish revolution.

The aftermath of World War II saw many countries fall into the orbit of the Soviet Union, Poland among them. But by the late 1970s, civil dissatisfaction was gaining strength in Poland.

The unrest in Wroclaw and later in the Gdańsk shipyards gave birth to "Solidarność Walcząca" – Fighting Solidarity – focusing organised resistance against the ruling Communist Party.

But how could the revolutionaries communicate with the general population in a dictatorial, one-party state? By telephone? Too risky, as you could be intercepted and arrested.

Newspapers? Forget that time-honoured medium, as well as its newer cousin, radio – as all media were effectively under State control.

You might post (or carry) printed reports and speeches but they lack the immediacy of a rally and the power of a crowd responding to inspirational speakers, laying out their criticisms and remedies.

This is where the humble Compact Cassette was the ideal tool. Portable recorders allowed organisers to capture the excitement of mass meetings, the stirring voices of Lech Wałęsa and his fellow Solidarity workers.

Cassette copying could be done with just a few machines and some simple cabling. And the cassettes themselves were small and unobtrusive, easily carried in a bag or a coat pocket.

As you would expect, the Government didn't just roll over. Almost a decade of civil strife, including martial law and extra-judicial killings, would pass before the Polish people were able to vote freely for a democratic government.

So the humble cassette tape and recorder had helped unite and inspire a nation hungry for responsible government.

Back to the 1960s

But we are getting ahead of ourselves. We must turn back the clock to the early 1960s when the first Compact Cassette and the matching recorder, the EL3300, was developed by Philips in their Hasselt (Belgium) laboratory.

Prototypes of both the Compact Cassette and the EL3300 were first demonstrated at the Berlin Radio Show in August, 1963.

We're going to gloss over the EL3300, and the following model, the EL3301 (introduced in 1967; the first to introduce accidental recording protection), to concentrate on the model that most experts regard as "setting the stage" for the compact cassette's massive success, the EL3302. This was first manufactured in 1968.

Groundbreaking technology

So just how revolutionary was it, electronically? It was pretty ground-breaking.

Before it came along, if we took the old adage of "a kilohertz per inch per second", we would accept a reel-to-reel tape system giving us a 15kHz response at 15 ips (38cm/s).

We might even accept a 7.5 ips machine for interviews, or a 3.75 ips "cheapie" for telephone-quality speech or dictation, topping out at around 3.7kHz.

But a response of under 2kHz for anything? Not good.

So the first challenge was to get any kind of quality at the uncommonly slow speed of 1.875 ips (4.76cm/s). Akai had been able to do this with their X4/X5 open-reel models, but only with a sophisticated cross-field bias system which could not be used in a cassette format.

There were many other challenges. If it was going to be a battery-powered machine, Philips needed to ensure constant recording and playback speed as the batteries discharged and it would need to provide constant speed with changes in ambient temperature.

We'd also like to see every transistor used in both recording and replay, with no wasteful dedicated erase/bias oscillator, as used in machines of that era.

It would need to drive an internal speaker but an external connection would allow it to show off a bit. And we also want to record from a microphone (easy enough) and from high-level sources such as gramophones and radio tuners.

One more thing – thanks for the adjustment on the recording bias, but let's not force the poor techies to hook up elaborate test jigs to inaccessible test points. And we want to provide external power. And be able to listen back on earphones.

And please let's not have a palm-sized patchboard with a socket for this, a socket for that, another for something you just thought of. It had to be kept simple. That meant simple controls, as well as a separate record level and playback volume, and a recording level meter that would double as a battery meter.

Furthermore, it was stereo-mono compatible.

Previously, we had the crazy reel-to-reel situation where you could not play stereo tapes on a mono machine and you could accidentally erase the original recording of the Titanic's sinking.

OK, there never was such a recording, but you get the idea.

Playing time? With LP records rarely reaching 30 minutes per side, a "60 minute" cassette would be a good start. The cassette tape manufacturers would take it from there.

"Open Source" 1960s style

Having invented the compact cassette, Philips wanted rapid market uptake. Faced with the problems of any single-source manufacturer trying to scale up a new product, after some negotiations (particularly with Sony) they decided to offer the design free of royalties to any other manufacturer, so long as the mechanical design was adhered to, and the relevant logos and trademarks were applied.

The rest is history: manufacturers large and small flocked to the table and established an audio standard that lasted well into the 1980s.

Continuous improvement in electronics and tape media were augmented by noise-reduction systems such as that by Dolby

Did you know . . .

The compact cassette/recorder was never intended for music. It was envisaged as a dictation machine, hence the stop/start switch on the microphone!

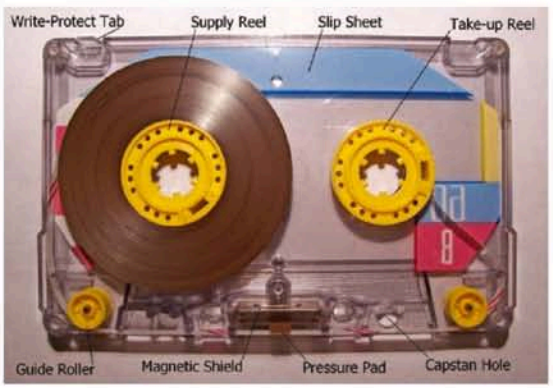

Inside the compact casette: maintaining *some* fidelity at the very slow speed (4.76 cm/s) on very narrow tape (3.8mm) was a real technology breakthrough, as was recording in both directions in mono or stereo, each compatible with the other.

1962

Led by Lou Ottens at their Hasselt, (Belgium) plant, Philips develop the Compact Cassette format.

1963

Intended for dictation, the Compact Cassette and EL3300 recorder were first introduced at the August 1963 Berlin Radio Show.

1964

The EL3300 went on sale in Europe and the UK in 1964 and in the US (under the Norelco brand) in November of the same year.

1966

Under pressure from (mainly) Sony, the Compact Cassette format was made royalty-free to other manufacturers

1968

The 1967 Philips EL-3302, with improved performance, including better battery life and motor speed control from its 5 x AA cells (7.5V)

Laboratories, to deliver results bettering vinyl discs.

Computer software, too

The cassette tape format was even adopted to store computer programs and data using the famous Kansas City format. Remember that extra DIN socket beside the keyboard port on the first IBM Personal Computer?

Yep, that was a cassette port. Commodore computers even supplied branded tape drives for their VIC20/C64 series, as did other home computer manufacturers.

The tape mechanism

The EL3302 uses a sliding deck mechanism that carries the two tape heads and the pinch roller, engaging the cassette during recording and playback. The capstan is fixed to the main chassis.

The cassettes are vertically registered by four chassis-mounted pins, with the back pressed down by a leaf spring. The two front pins, topped by conical guide cones, allow the cassette to snap lightly down at the front. The cassette is pressed lightly froward against the front pins (for complete registration) by the rear leaf spring.

Conventional (ie, reel-to-reel) tape drives set the driving spindle (capstan) against the tape's oxide side, with the pinch roller against the back. Allowing the metal capstan to contact the sensitive oxide layer gives much less tape deterioration than would happen with a rubber pinch roller contact.

This works fine for a reel-to-reel system, where the system could be "oxide out" or use the universal modern plan of "oxide in".

But the compact cassette needed to present its oxide to the heads outside the cassette housing, and making the capstan bear on the (outer) oxide side would have demanded fitting each cassette with its own internal pinch roller.

Philips reversed the usual plan, placing the capstan in contact with the tape back (inside the cassette housing) and the pinch roller outside, in contact with the oxide layer.

While this works fine, it does allow shed oxide to accumulate on the pinch roller.

Oxide accumulation on the roller (or any sticky matter) can grab the tape and bunch it up around the pinch roller. So regular inspection and cleaning are advisable.

The tape drive must apply a small "holdback" torque to the supply reel to prevent slack tape between the supply reel and heads. So the transport design applies a few grams of tension to keep the tape taut.

Intimate contact between the tape and record/play head is critical to properly record and playback, and each cassette has a spring-loaded pressure pad for this purpose.

Oxide accumulation on the pressure pad can cause a squealing sound in record or playback operation.

The erase head has no pressure pad; the tape naturally wraps over its curved surface, and its powerful magnetic field is sufficient to erase the tape without needing perfect contact.

The pinch roller is slightly wider than the tape, allowing its top and bottom margins to contact the capstan and pick up positive drive. After leaving the capstan/pinch roller station, it's vital that the tape is gathered up to prevent it spooling loosely out and jamming.

Failure of take-up tension is probably the most common cause of tangled/jammed cassettes. Take-up tension is applied to the take-up spindle via a felt-pad clutch driven from the flywheel.

The DC motor, controlled by a polarity-reversing multi-pole leaf switch, drives the flywheel via the main belt. The two cassette spindles (supply and take-up) are driven by the secondary shuttling (fast forward and rewind) mechanism.

For shuttling, the heads and pinch roller remain in the retracted position, with full drive being applied to the take-up or supply spindles as determined by the position of the operation handle.

During playback and recording, the shuttling mechanism is disengaged from the main flywheel but lightly loads the supply spindle to ensure holdback tension between the supply reel and the capstan.

The deck mechanism slides forward, inserting the two heads and the pinch roller into the cassette. At the same time, power applied to the set starts the motor's drive to the capstan and to the take-up spindle.

For playback, the play/record switch sits in its normal (play) position.

For recording, the play/record switch is actuated, but only if a thin spring leaf is depressed by the record button. This is permitted if the recording tab on the rear of the cassette body has not been broken out; as purchased, the tab's existence allows a cassette to be recorded on.

Pre-recorded cassettes had the tab missing. If you subsequently wanted to record over it, the standard workaround was to put a piece of tape over the missing tab.

Recording emphasis and equalisation

The tape medium does not respond equally to all audio frequencies, yet we expect any record-play system to reproduce the original sound spectrum faithfully. So the designers needed to compensate for the tape medium's peculiarities. Let's look at the recording process first.

For recording, the critical measure is the actual variations in magnetic flux "printed" onto the tape's active layer. Whether it's an oxide or a metallic coating, it's easy to get a flux proportional to input signal up to the audio mid-range. The actual frequency varies with tape speed: for 38cm/s, flux is con-

There were four different types of cassette tapes over the years:
Type 1 – iron oxide, two write-protection notches (bottom)
Type 2 – chrome/cobalt, two protection notches (middle)
Type 3 – ferrichrome (not shown)
Type 4 – metal, two more notches in the centre of the cassette (top).
Each successive type gave improved perfomance.
Source: vintagecassettes.com/history/history.htm

1973

Nakamichi produced cassette decks from the early '70s and quickly became the choice of "true" audiophiles. Their top deck retailed for $US6000. . . in 1978!

1979

The Sony Walkman, launched July 1st 1979, brought mainstream appeal "on the move" to the Compact Cassette – truly revolutionary!

1970

All types of cassette players were produced by various manufacturers – this "My First Sony" aimed squarely at the children's market.

1997

While there are still some cassette-only players made, digital players sounded the death knell for most: the mpman was the first in 1997.

2017

Cassette-only players have morphed into all-in-one music systems, such as this modern AM/FM/CD/Cassette unit from Philips.

stant to around 4.5kHz: for 4.75cm/s it's about 1.3kHz.

Flux on tape

It's desirable to correct this fall-off during recording as shown in Fig.1, as this preserves the desired level of flux on the tape at a high level, rather than letting it fall towards the system's natural noise floor. This is an equalisation process, since it's applied to correct system deficiencies, and is not counteracted during replay.

Early mains-operated tape recorders were sensitive to mains hum, so the National Association of Broadcasters (NAB) issued a standard that boosted low frequencies around 50Hz. The specification for a time constant of 3180µs equates to around 50Hz, and this time constant specification allows easy design of a single RC feedback network for pre-emphasis.

As this is pre-emphasis, its boosting of low-frequency content will be removed by complementary de-emphasis on playback.

Ultimately, there were two high-frequency equalisation curves as can be seen in Fig.2 along with the matching playback curve in Fig.4: 120µs (1.32kHz) for conventional ferric oxide tape and 70µs (2.26kHz) for chromium dioxide tape, which came along much later.

A matter of bias

There's also a problem with the linearity of any magnetic circuit and here we must discuss the relationship between magnetisation (B) and magnetic flux (H). The typical B-H curve shows how recorded flux fails to match the magnetising current at low levels.

See Fig.3. Notice that the path a-b only ever happens once for unmagnetised tape: every subsequent excursion of the magnetising field, H, will produce a flux, B, somewhere along b→c→d→e→g.

The result of this gross non-linearity is very similar to severe crossover distortion in a push-pull Class B amplifier.

The earliest method to combat this was to use DC bias. This shifted the recording current up one half of the B-H curve but gave limited dynamic range and was very noisy.

The solution, still in use, was to use high-frequency bias. This effectively blankets the tape with ultrasonic signal of greater amplitude than the audio signal being recorded (the EL3302 uses a bias signal of ~40kHz).

The cumulative effect of the ultrasonic bias with the audio signal is a B-H curve that's linear up to the point of magnetic saturation.

Once the signal has been recorded on tape, it must be played back. In playback, the moving tape's magnetic flux patterns cross the replay head's pole pieces.

Now, low-frequency magnetic patterns on our tape will be passing the head fairly slowly, giving slow flux changes and thus a low output voltage. But high-frequency patterns will be passing much more quickly, giving a high output voltage. You get a doubling of voltage with a doubling of frequency; more specifically, 6dB/octave or 20dB/decade.

Even with a perfect recording system, the playback signal will need to be corrected so that the original audio signal's spectral content is faithfully reproduced. Notice that this 6dB/octave rise did not exist in the recording phase, so its correction is a new application of equalisation.

This involves de-emphasis as well as correcting the low-frequency pre-emphasis added during recording to reduce any 50Hz hum in the overall system.

Circuit Description

Now look at the circuit of the Philips EL3302 (Fig.5). I've omitted circuit DC and signal voltages for brevity, but you can find the Dutch service manual, with full analysis, along with exploded diagrams of the mechanism, clear circuit diagram and board layouts plus electrical and mechanical adjustments at: https://elektrotanya.com (you will need to register via an electrical theory test).

Inside the EL3302, showing the transport and heads. To initiate recording you would hold down the record button and slide the four-function button towards the cassette.

Switching between record and playback is handled by a multi-pole linear switch M1, with playback contacts marked as "I" and record contacts marked as "II". The switch runs almost half the length of the main circuit board. Note that all the transistors are Philips germanium types while the diodes (all BA114) are silicon.

Let's start with the easy part, the output amplifier. It's a conventional complementary-symmetry design, using the germanium AC127/AC128 pair to drive the speaker. Biasing is handled by D3, a BA114 silicon diode

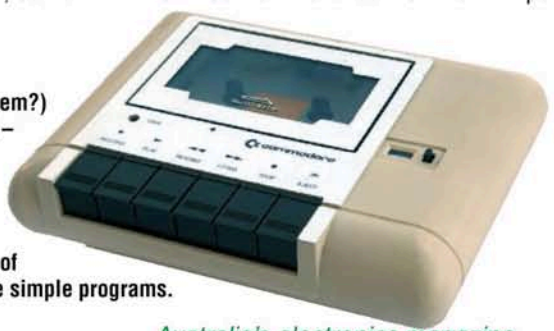

Commodore Computers (remember them?) adopted the Compact Cassette format – and a dedicated recorder, the 1530 Datasette – as the storage medium for their Vic-20 computer, announced in 1980. It preceded floppy disks by some time but took (sometimes) tens of (impatient) minutes to load even quite simple programs.

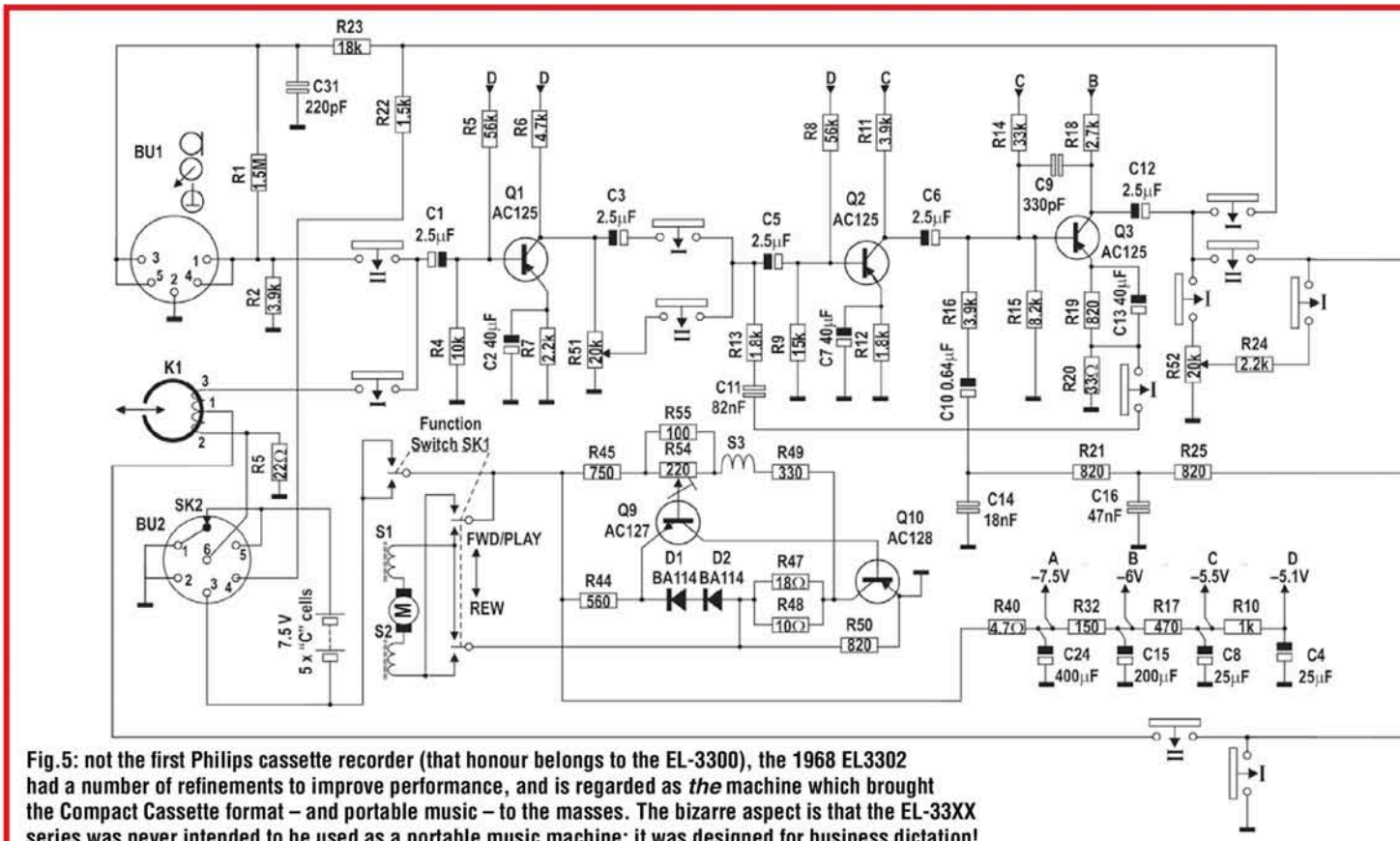

Fig.5: not the first Philips cassette recorder (that honour belongs to the EL-3300), the 1968 EL3302 had a number of refinements to improve performance, and is regarded as *the* machine which brought the Compact Cassette format – and portable music – to the masses. The bizarre aspect is that the EL-33XX series was never intended to be used as a portable music machine: it was designed for business dictation!

that gives a pretty constant 0.6V drop but responds to temperature increases by reducing its forward voltage.

This means that the output transistors will get the lower bias needed at higher temperatures and will be protected from thermal runaway. The AC127/128 pair only need about 120mV each and the voltage divider comprising resistors R38 & R39 neatly provides this.

The driver transistor Q5 (a low-power, high-gain AC126) couples directly to the output pair. Its emitter goes via R37 to ground, and there is almost no DC voltage drop across the resistor.

Q5 has bias applied to its base from the emitters of the output pair, via R42 and R35, forming a voltage divider with R33. But for this to happen, we need the top output transistor, Q6, to turn on.

Since Q6 gets bias from the battery via R41, it will turn on strongly and pull its emitter up close to the supply voltage. This ensures that Q5 will get base bias via R42/R35, putting it into conduction. Q5's collector current will draw the D3/R38/R39 bias network down, thus reducing Q6's base voltage.

Since this will also cause Q6's emitter voltage to fall, the circuit experiences negative voltage feedback, stabilising the circuit with the Q6/Q7 junction at half supply, around 3.7V. There's a capacitor, C23, in the bias circuit to ensure stability.

This biasing arrangement applies both in recording and playback. During playback, the amplifier drives the speaker so you can hear the program while in record mode, it provides the ultrasonic bias and erase signals at 40kHz.

So let's look at playback mode first. Signal is applied from preamp output amplifier Q4 via R30 and C21 to Q5's base. Switching at the emitter puts C23 into circuit, bypassing emitter resistor R37.

This allows Q5 to run at full gain but the overall circuit has negative feedback applied from the output emitters via R36 and C22 in series with the Q5's bias network and Q5's (lower) input impedance.

Audio output is conveyed via switch contacts to the internal 8-ohm speaker or (if plugged in) to an external speaker. Since Q6 must draw some 10~20mA of peak base current, R41 is bootstrapped from the active terminal of the speaker.

Returning the speaker's "cold" terminal to the battery supply means that its active terminal ranges (on the output's positive half-cycle) from around 7.5V up to some 11V at full output, thus providing adequate base current for Q6.

In record mode, the output amplifier is con-

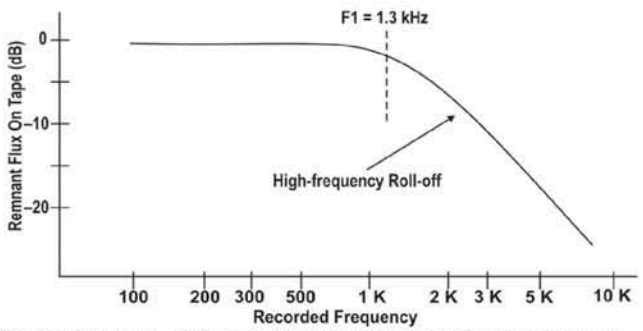

Fig.1: typical roll-off that would occur when recording to a compact cassette tape.

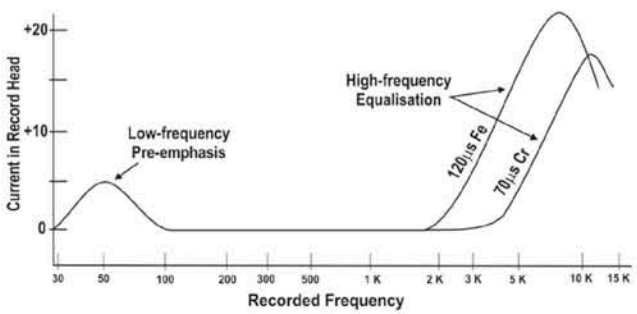

Fig.2: the two high-frequency equalisation curves used during recording at 120µs (Type 1) and 70µs (Type 2-4).

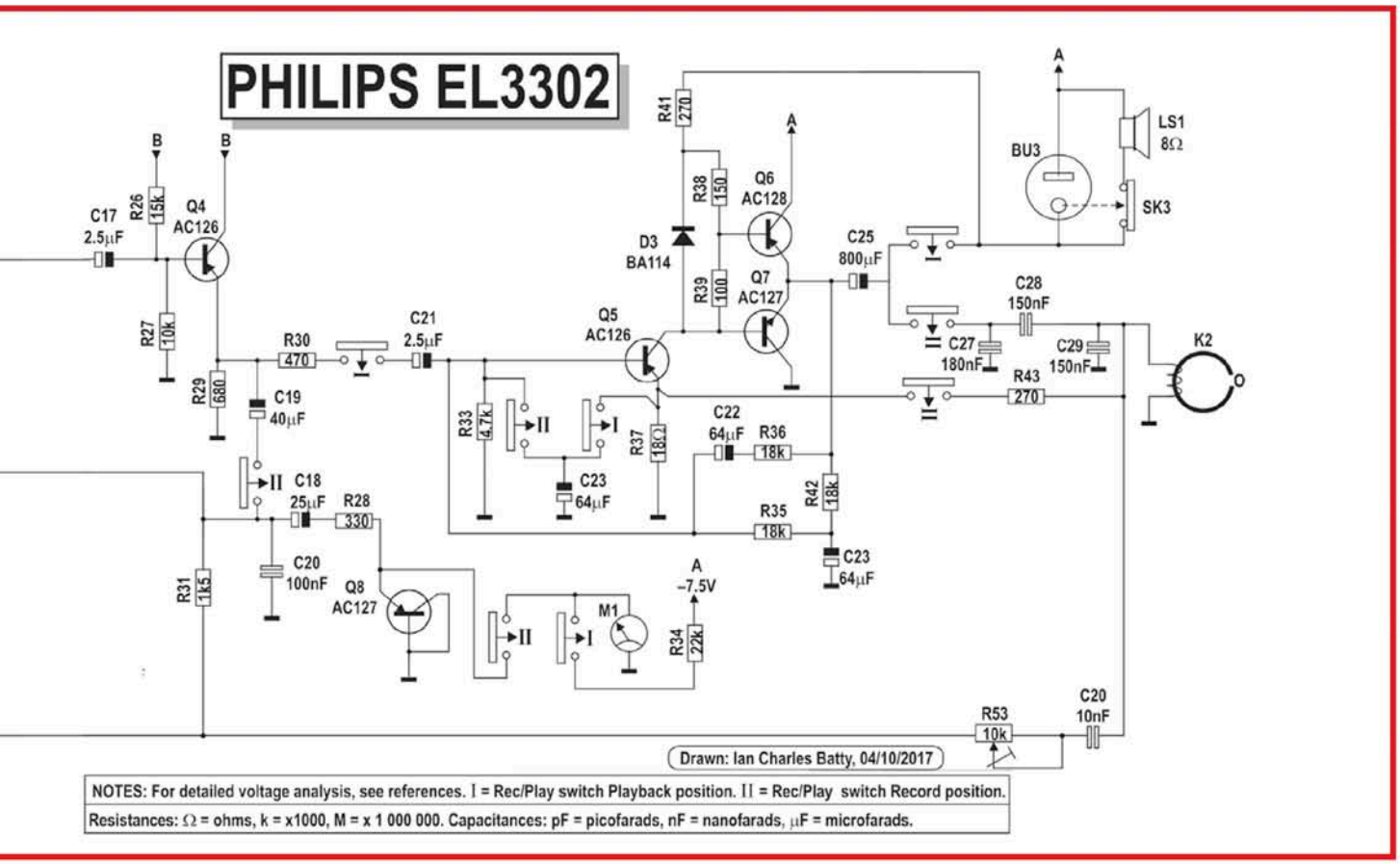

figured to operate as the erase/bias oscillator, running at some 40kHz. This will need (i) a resonant circuit tuned to 40kHz and (ii) positive feedback from output to input.

The resonant circuit is easy. The inductance of erase head K2 is paralleled by the capacitor combination C27/C28/C29, with C28 & C29 for impedance matching.

The tuned circuit then feeds back to the emitter of Q5 via R43 to the junction of Q5's emitter and R37 (now unbypassed, since the I switch is open).

The I switch connecting to the speaker is also disconnected to prevent speaker loading.

For oscillation we need (i) 0° phase angle and (ii) gain >1.0 around the loop. Feedback goes to Q5's emitter, and its base is grounded by switch II connecting the base to C23.

The output stage operates as emitter-followers, so we have our 0° phase around the loop from Q5 collector to emitter. A common-base stage has voltage gains equal to (or better than) a common-emitter stage, so the entire circuit will have a loop gain of greater than one and the circuit will oscillate at around 40kHz.

The erase head, being in the oscillator circuit, receives the full drive signal and is able to erase any signal on the tape passing it. The recording head needs a smaller amount of the 40kHz signal for bias. This is picked off via C20 and R53, with preset R53 adjusted for the optimum bias level.

Just before we leave this circuit, there's R5 (22Ω) in series with the record/playback head, and connecting to 6-pin power socket BU2.

In record mode, a small amount of bias voltage will appear across series resistor R5, allowing correct bias adjustment without the need for connections into the tightly-packed circuit board.

This is done by connecting a millivoltmeter to BU2 pin 6 and setting R53 for around 25mV.

Still in record mode, the preamp section uses four transistors to amplify the microphone signal of about 0.2mV and to apply pre-emphasis to the audio signal. It then drives the record section of the record/play head to "write" magnetic patterns on the cassette tape.

Input amplifier Q1, a low-noise AC125, operates as a conventional combination-biased, common-emitter amplifier.

It's a "flat" stage with no shaping of its frequency response. The main section involving Q2 & Q3, also AC125s, uses a similar configuration but has either of two negative feedback paths in action, one for playback, one for recording.

During playback, Q2 & Q3 get Q1's signal directly via C3 and C5. The amplified signal appears at both the collector (across R18) and emitter (across R20) of Q3. Q3's emitter signal is switched into the series network of C11 & R13, and sent (as negative feedback) to the base of Q2.

This network causes a drop in gain with frequency. It's a classic -6dB/octave RC feedback loop that equalises the replay head's natural 6dB/octave output rise.

Q3's output goes, via further switching to R52, the playback volume control. From R52, the audio goes via R24 to Q4, an emitter follower which has a low output imped-

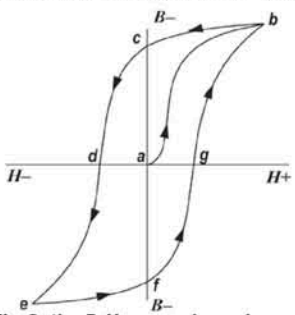

Fig.3: the B-H curve shows how recorded flux fails to match the magnetising current at low levels.

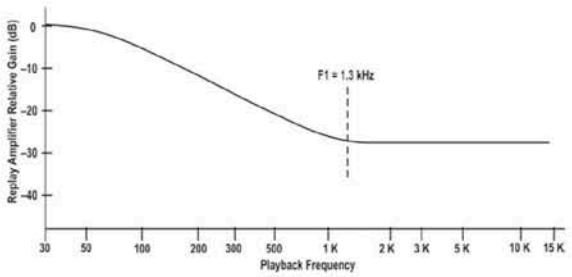

Fig.4: the playback equalisation curve.

On the main PCB, due to a lack of space, most components are mounted upright. It plays and records in mono only, not stereo.

ance; especially necessary in record mode. Q4's emitter signal goes via further switching, to the base of audio driver Q5 and thence via Q6/Q7 output stage to the speaker.

Looking back to Q3, its collector output signal is also connected back to BU1, the DIN microphone/high-level input socket, to supply playback audio to an external amplifier.

The signal also passes via R22 to the battery/utility connector BU2, to drive high-impedance headphones independent of the speaker and volume control.

In record mode, Q1 gets either the microphone signal directly from socket BU1 pins 1 and 4, or an attenuated high-level signal from pins 3 and 5, via R1/R2. As in playback mode, preamp Q1 has a flat response.

Record level control R51 is switched into circuit, allowing correct adjustment for recording.

Like Q1, Q2 now operates with no feedback, giving maximum gain across the audio bandwidth. Q2's signal is applied to Q3's base via C6. It's here that feedback is applied while recording. Q3's output is switched directly to Q4's base, eliminating the playback volume control.

Q4's emitter connects to an equalising network (R25/C16/R21/C14). At low frequencies, C16 & C14 have no effect, allowing full negative feedback from Q4's emitter back to Q3's base. As the frequency increases, the reactances of C16 & C14 decrease, feedback decreases and gain rises at higher frequencies.

This network creates two break points to give a 12dB/octave rise in head current (and thus recorded flux) that tops out around 10kHz. This gives high-frequency equalisation to compensate for recording losses at the high of the audio band.

Record amplification terminates with Q4. As well as applying feedback to Q3, Q4's output feeds the record winding on the record/play head via R31.

This resistor's value is high compared to the tape head's reactance at low frequencies, so it forms a substantially constant-current drive for recording.

This eliminates the need to compensate for the tape head's inductive reactance (and thus recording current) varying with frequency.

The final output branch goes, via C18/R28, to Q8, a diode-connected AC127. This rectifies the audio signal and drives the meter to show the correct recording level. Notice that, in playback, it connects to the battery supply via R34 to show the battery condition.

Now for the cleverest part of this little gem, the requirement for a constant tape speed regardless of battery voltage and temperature.

Previously, a good old governor would be used, involving a small centrifugal contact on the motor armature. As the motor reached the correct speed, the contacts would open.

With the supply broken, the motor would slow slightly, allowing the contacts to close and supply power again.

In practice, the speed fluctuation was quite small and could easily be damped using a rubber belt drive to a low-speed flywheel.

It's really a centrifugal version of the Tirrill (vibrating-contact) regulators used with motor car generators and early alternators.

Like the Tirrill regulator, this is electrically noisy and is prone to erratic operation due to contact wear and corrosion.

This method was used to obtain a constant speed for battery-driven record players of the day.

An electronic speed regulator

A DC motor spins due to interaction between its armature's magnetic field and the stationary field magnet.

But the armature windings are continuously passing through the field magnet's field, so the armature winding develops a back-EMF that acts against the applied supply voltage and thus reduces the motor's current demand.

The two EMFs balance according to load, with the back-EMF decreasing under load and allowing the motor to draw extra current.

An ideal motor would maintain constant speed. Armature resistance compromises a motor's EMF-balancing process, thus practical motors slow with load. So, why not design a motor controller that can account for the armature resistance?

It wouldn't be as precise as adding a tachometer winding reporting speed feedback to a constant-speed electronic servo but it would work pretty well.

Testing the EL3302's Frequency Response

Testing frequency response in real time (such as an amplifier) is a bit tricky.

You need to set the audio generator to, say, 20Hz and measure the output. Then do this for 50Hz, 100Hz etc, all the way up to at least 20kHz.

For a record/playback system, you'd need to record, say, 15 seconds for each spot frequency, then play the tape back and do your measurements, maybe rewinding if you missed a reading.

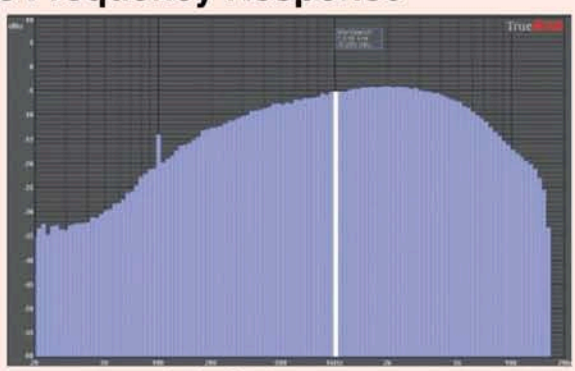

EL3302 Record-Playback response using TrueRTA Spectrum Analysis software and pink noise.

Spectrum analysis software makes this much easier. A pink noise source features a high-frequency roll-off that gives constant energy levels per octave (or part thereof) rather than the rising energy content of white noise. Put through a spectrum analyser (with equipment having a flat passband) you'd get bars of constant height across the audio spectrum. So, what I did was simply to record audio-frequency pink noise for a few minutes, then play it back into the spectrum analyser software to determine the EL3302's frequency response immediately.

Record/playback response

My spectrum analyser of choice is Real Time Analyser (True RTA), which an audio generator (sine/square/white noise/pink noise), an audio digital oscilloscope and a spectrum analyser.

Distortion analysis software is also available, but I find it easy enough to use a signal generator and my noise and distortion meter. combines

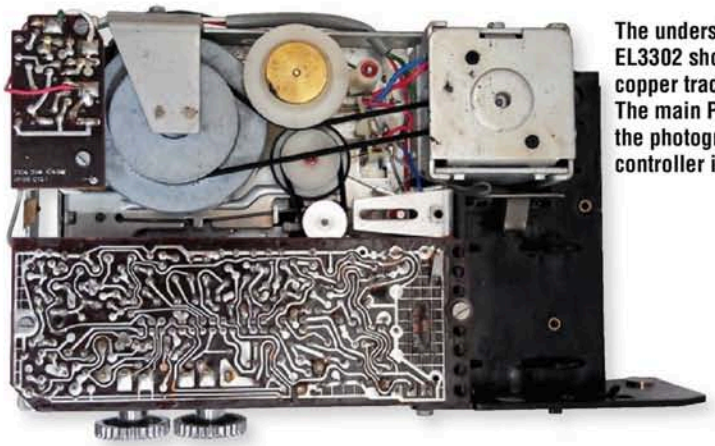

The underside of the Philips EL3302 shows that all the copper tracks have been tinned. The main PCB is at the bottom of the photograph while the motor controller is at the upper left.

The motor controller uses Q9 & Q10, in series with the motor to ground, with the motor's "top" connection going to the battery supply. Transistor Q9 operates as a comparator.

Its bias divider (R45/R54/R55/S3/R49) is strung between the battery supply and the collector of regulator Q10. Q9's emitter voltage is stabilised by series diodes D1 & D2 to about 1.2V above Q10's collector voltage.

Since Q10's collector is the "sink" for the motor's circuit connection, Q9's base-emitter bias responds to the voltage drop across the motor. That is, Q9 & Q10 regulate the motor voltage according to the setting on preset pot R54.

So far, we only have an adjustable electronic regulator that would keep the motor voltage constant as the battery supply ran down.

We need to add load regulation to keep the motor speed constant as the motor's mechanical load varies. Paralleled resistors R47 & R48 perform this function.

If the motor current rises, the voltage across R47 & R48 will increase. This will reduce the voltage at the junction of R47 & R48 with Q10's collector, increasing the voltage across the base bias divider to Q9.

Since the emitter voltage is derived from the top of R47 & R48, the overall bias will increase and the Q9/Q10 combination will draw more current, restoring the motor's speed to the set point.

It's a positive feedback circuit but the amount of feedback is finely balanced to counteract the motor's natural drop in speed with increasing load. And S3? It's a small coil of copper wire.

The slogan "Nakamichi Spoken Here" was on a sticker displayed on the windows of the best audio retailers in the 1970s and 80s. It became one of the more esoteric advertising slogans, spoken in almost hushed, reverent tones!

But rather than acting as an inductor the controller uses this winding's temperature coefficient of some +0.4% per °C to compensate the regulator against varying ambient temperature.

So is this the first practical electronic motor speed regulator?

Probably not, but it would have been the first to be used on such a wide scale in a consumer electronic product.

All told, one can only admire the clever design aspects of this ground-breaking product.

If you add up all the elegant, clever design elements, include its launching of the personal audio industry, pop in the EL3302's part in the demise of a dictatorship, and I think I can well and truly justify that "revolutionary" title I talked about at the start of this feature.

Getting it going

Apart from a missing badge (top right on the speaker grille) and a worn-out carry case, my unit was in good external condition. Inside, both of the drive belts had decomposed into a sticky black goo.

It's a common fault with tape drives but I was able to get a replacement set online.

The black goo is hard to remove but I found turpentine useful.

Fortunately, the rubber rims on the wheels and spindles were still in good condition.

Electrically, it was fine apart from noisy pots. Fiddling with the bias setting gave no better results than original specifications.

How good is it?

Good enough to start a revolution! The manufacturer specifies ±6dB for the frequency response, and my EL3302 achieved this over 95Hz~12.9kHz, with the more common spec of -6dB giving a result of 190Hz~8kHz.

THD at 1kHz, full level was around 3% and 1.8% at 10dB down.

The signal-to-noise ratio was around -52dB at 1kHz. These figures were achieved with a

...Continued on Page 103

OCEAN CONTROLS
Helping to put you in Control
WE HAVE MOVED
44 Frankston Gardens Drive
Carrum Downs VIC 3201
PH (03) 9708 2390
FX (03) 9708 2392

12V Programmable Logic Relay
TECO SG2 Series PLR, 12VDC Powered, 6 DC Inputs, 2 Analog Inputs, 4 Relay Outputs, Keypad / Display, Expandable (Max. 34) I/O. Free Software.
SKU: TEC- 004
Price: $149.95 ea + GST

BACnet MS/TP IO-Module
BACnet I/O Module with DIN-rail Enclosure. Ideal for building monitoring. 2 x NTC10/resistive/volt-free digital inputs, 4 x analogue 0-10V outputs, 2 x dedicated volt-free digital inputs. 2 x 24Vac triac outputs. 24Vac power supply.
SKU: SXS-106
Price: $195.00 ea + GST

Modbus Universal AI Module
The A-1019 Remote Modbus module provides 4 isolated digital inputs, 8 Universal Analog Inputs. Analog input Type:0/4~20mA,J,K,T,E,R,S,B Thermocouple and Thermistor. RS-485 interface supports a simple ASCII protocol and Modbus RTU.
SKU: YTD-419
Price: $192.00 ea + GST

Closed Loop Stepper Drive
Leadshine CS-D508 is a closed loop stepper drive, suitable with 2-phase stepper motor in frame size NEMA 17, 23, or 24 with 1000-line incremental encoder.
SKU: SMC-160
Price: $169.00 ea + GST

Closed Loop 2 Phase Motor
With a 1000 line encoder. This 3.1Nm stepper motor can be used with the CS-D508 drive to detect missing steps and improved performance.
SKU: MOT-163
Price: $159.95 ea + GST

5V TTL to RS-485 Converter
TTL-485-5P is a bi-directional port powered RS-485 to 5V TTL converter with built in surge protection.
SKU: TOD-030
Price: $59.95 ea + GST

For Wholesale prices
Contact Ocean Controls
Ph: (03) 9782 5882
oceancontrols.com.au
Prices are subjected to change without notice.

Are you paying way too much for your electricity?

VERY SMART TARIFF SUPER CLOCK

The media abounds with sob stories involving electricity smart meters, where promised savings have not only failed to materialise but hapless consumers are even paying $$$ more for their power than they did before their smart meter was installed. The main problem is that most consumers are blissfully unaware when shoulder tariffs (read *expensive*!) or peak tariffs (read *very expensive*!) have kicked in. This "clock" project will warn you – and help you to avoid "bill shock" from electricity suppliers!

By Tim Blythman

The principle is simple enough: all you need to know is which tariff is active at any particular time.

The execution is a little more complex – the way we've gone about it is to modify our very popular Touchscreen Super Clock (July 2016 – siliconchip.com.au/Article/10004) so it can display which power tariff is currently active (peak, shoulder or off-peak) so that you know how much you're paying for electricity.

Don't know?

The clock will also display that for you.

You can build it from scratch or update an existing Super Clock. It's super-accurate, using a real-time clock module, GPS or NTP (internet) time.

This project is a two-for-one deal – you get a very useful world clock with accurate timekeeping and automatic daylight saving adjustments, plus you get that very simple way of checking how much you are currently paying for electricity.

Since electricity is very expensive and potentially much *more* expensive if you have a so-called "smart meter", you want to run your high-power appliances during off-peak times, if at all possible.

But how do you know when that is?

All you have to do is look at the face of this clock and you will immediately know by its colour whether the present tariff is peak, off-peak or shoulder.

The display is red during peak periods, black for shoulder periods and green for off-peak.

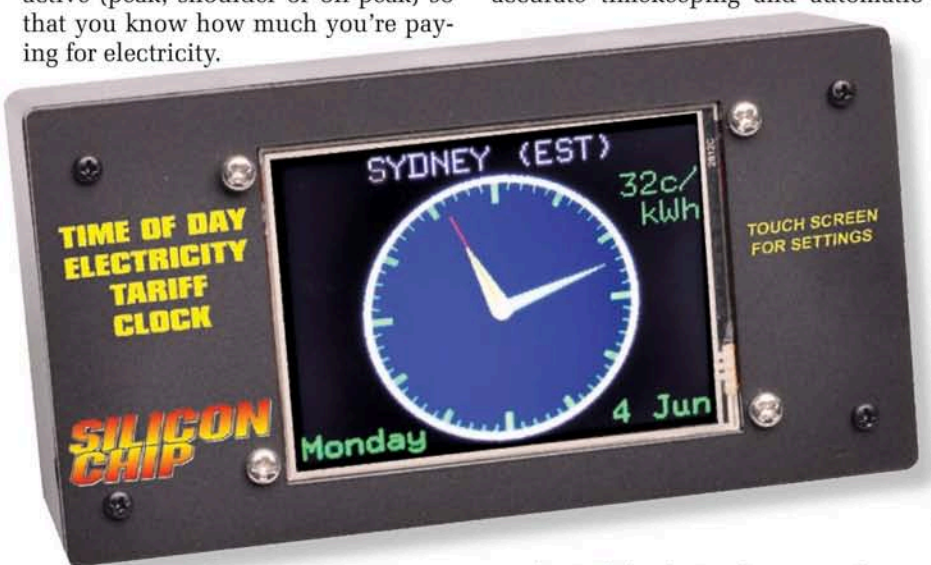

Looking for controls? There are none: everything is controlled via the Micromite BackPack touchscreen. Here the black screen denotes that it is on "shoulder" tariff time (32c per kWh) – not quite as expensive as "peak" but expensive enough to make a serious dent in your budget! Incidentally, you have the choice of digital or analog clock "face" (as seen here).

You can also have a small display in the corner of the screen showing the current cost in cents per kWh, so you know exactly how much you are paying for power at any instant.

While you can't always decide when to use power, some energy-hungry tasks can be timed to coincide with the cheaper tariffs.

For example, you could avoid doing laundry when the peak tariff is in effect, and similarly, you could delay running the dishwasher when power is expensive.

Most dishwashers heat the water electrically, as do many washing machines, making them very power-hungry.

If you have a swimming pool, your pool pump is probably on an automatic timer but you need to periodically check that it mostly runs during off-peak periods to save money.

And some people prefer switching on their pool pump manually at certain times, especially when using it to run a Kreepy Krauly or similar cleaning appliance.

You can set up the tariff periods and costs displayed by the clock to match those from your electricity retailer (you should find the rates on your last bill).

Don't die of shock when you're reminded what you're paying!

Features

- **Display changes colour to indicate peak, shoulder or off-peak tariff**
- **Cost of electricity is shown (in c/kWh)**
- **Up to six tariff transitions per day; can vary between weekdays and weekends**
- **Digital (12hr/24hr) and Analog clocks**
- **Up to 20 separate clock screens with different time zones**
- **Accurate timekeeping with low-cost real-time clock module**
- **Alternatively, can be synchronised to GPS or NTC (internet) time**

*NOTE: this clock does not **control** power in any way (it is not connected to the mains supply). It is only designed to give you an accurate, visual indication of the current tariff.*

Hardware and software

This project is an evolution of Geoff Graham's "Touchscreen Super Clock", which was published in the July 2016 issue (siliconchip.com.au/Article/10004).

It used a Micromite LCD BackPack module with 32-bit PIC and 2.8-inch LCD touchscreen, plus either a real-time clock module or GPS module for timekeeping.

But the real key to that project was the MMBasic software which turned it into an accurate and easy-to-use world clock.

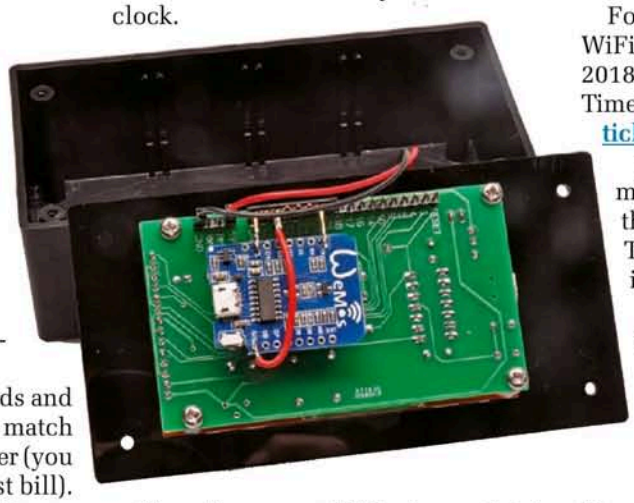

Since then, we published an updated Micromite LCD BackPack V2 module (May 2017; siliconchip.com.au/Article/10652), which incorporates an on-board USB/serial interface and PIC32 programmer, making it easier to set up. It also has the option for the software to control the LCD backlight brightness.

And we are providing another refinement for this version of the clock: if you have a WiFi network, you can use the Network Time Protocol (NTP) to get accurate time over the internet. This is especially useful if you want the clock to keep time accurately but don't have good GPS reception – perhaps because the unit is too far indoors.

For this you only need an ESP8266 WiFi module, as described in our April 2018 article on the "Clayton's" GPS Time Source (siliconchip.com.au/Article/11039).

If you've already built the Micromite Super Clock, it's easy to update the software to add the Time-of-Day Tariff display; no extra hardware is needed.

If you haven't, building it is quite straightforward.

Circuit description

The circuit is shown in Fig.1 and virtually all the parts are part of the LCD BackPack V2 module. The only additional parts are the timekeeping modules, as shown near the bottom of the diagram. Only one of the three modules needs to be fitted.

The BackPack is designed around IC1, a 32-bit microcontroller with 64KB of RAM, 256KB of flash memory, an internal analog-to-digital converter, timers, PWM generators and so on. IC2 is an 8-bit microcontroller which provides the USB serial interface via CON4 and interfaces with the main serial port at pins 11 and 12 of IC1 (which is also broken out to header CON1).

Twenty to five in the morning and the clock is glowing green to show you that you're in the off-peak tariff (they're still charging you 19c/kWh!)

11.13AM and you're in the black: shoulder, that is! But look at that tariff – 32c/kWh – it's almost (but not quite!) as bad as the peak tariff!

Danger, Will Robinson, danger! It's glowing red to warn you that you're being charged a whopping 38c/kWh in peak period (3pm–9pm in this case).

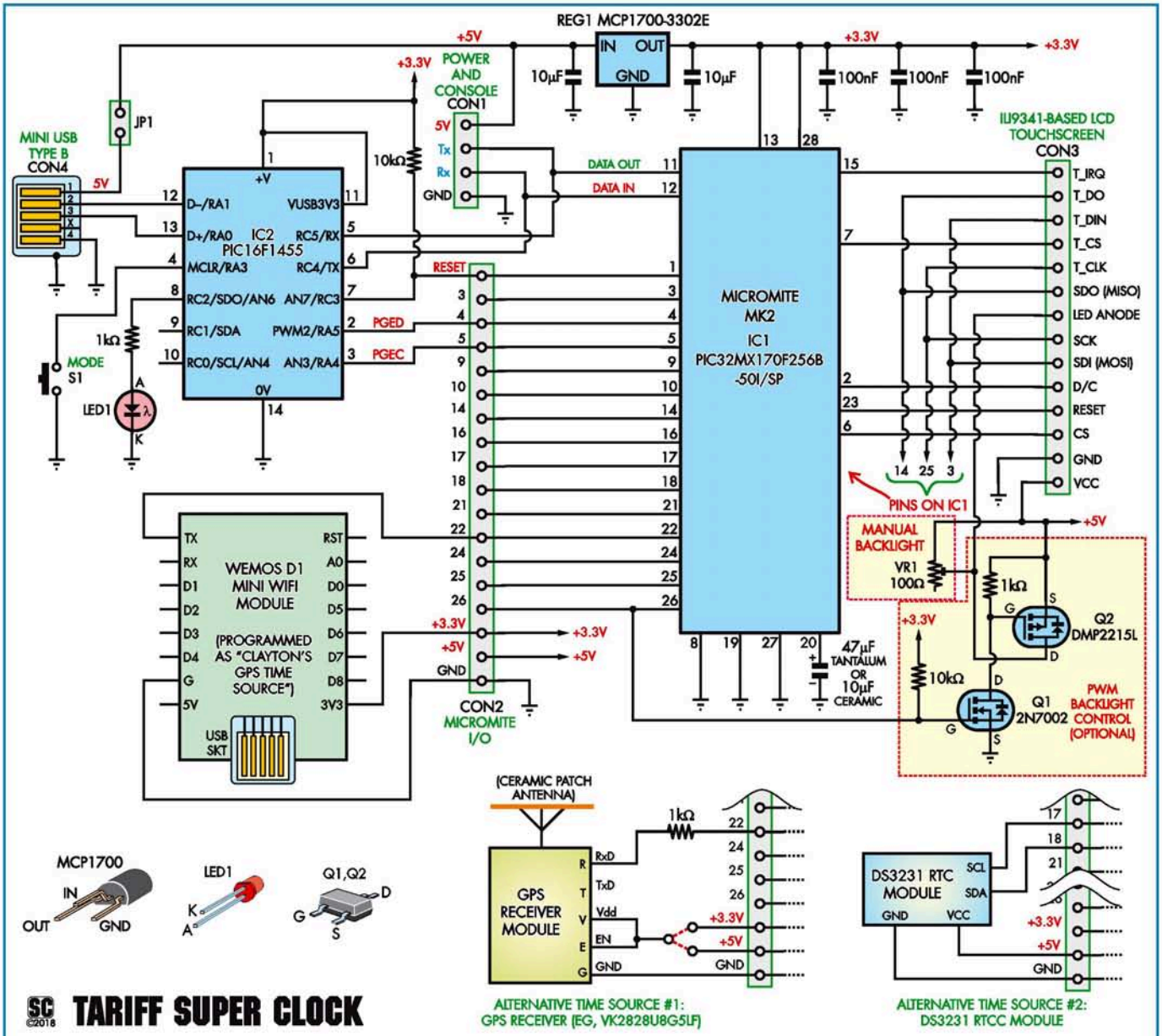

Fig.1: the circuit of the Tariff Clock is essentially just the Micromite LCD BackPack V2 (which incorporates the Micromite [IC2]) with one of three possible time sources wired to CON2, allowing it to get the time from either the internet (NTP), GPS satellites or an on-board real-time clock. Power comes from a USB charger or 5V plugpack wired to CON1.

IC2 also allows operation in a different mode, where it resets microcontroller IC1 and re-programs its flash memory via pins 4 and 5 (programming data and clock respectively). This means you don't need a separate PIC programmer to upgrade to a newer version of the Micromite firmware (and MMBasic).

REG1 provides the 3.3V supply for IC1, derived from the 5V either from the USB socket (CON4) via jumper JP1 or from header CON1. Mosfets Q1 and Q2 allow a PWM signal from pin 26 of IC1 to control the touchscreen backlighting LED brightness. VR1 can be fitted instead to provide manual control, however, the kit is supplied with these Mosfets and we recommend that you fit them.

Communications between IC1 and the LCD touchscreen are over an SPI (serial peripheral interface) bus on pins 25 (clock), 3 (data from IC1) and 14 (data to IC1). Pins 6, 23 and 2 of IC1 drive the LCD chip select, reset and data/command control lines respectively.

The touch sensor shares the same SPI bus, however pin 7 and 15 are used for its chip select and interrupt request lines.

The circuit diagram shows a WeMos D1 ESP8266 WiFi module being used as the time source. This needs to be programmed with the software from our April 2018 project to allow it to connect to NTP servers over the internet (via WiFi), fetch the time and supply it to microcontroller IC1. Only three wires are required; two for power (3.3V and GND) and one to feed the serial NMEA data to pin 22 of IC1.

The two alternative time source connections are also shown in Fig.1, with connections for the GPS module being almost identical to those for the WeMos module.

The 1kΩ resistor is simply a safety feature in case your GPS module is running from 5V and its output pin goes higher than +3.3V. Our recommended GPS module can run from 3.3V, in

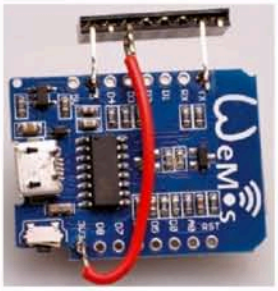

We used the Clayton's GPS (WeMos D1 Mini) option for our clock. It's cheaper than a full-blown GPS module.

which case this resistor is not necessary.

The third option is the DS3231-based real-time clock module and this simply involves four connections, two for power (5V/GND) and two for the I^2C bus (SDA [data] and SCL [clock]). The 5V supply is used so that the module can charge its on-board Lithium-ion button cell.

If you're using a primary (Lithium) cell then you could run it off 3.3V instead and indeed that would be safer, since it would not have enough voltage to try to charge that cell.

Having said that, if using a primary cell, it's still a good idea to pull the charging diode off the board just in case (see page 60 of the June 2016 issue for details on doing so).

So that covers the operation of the Micromite BackPack circuit and its alternative time sources; what sets this project apart from the original Super Clock is the new software.

How the software works

We started with the existing Super Clock code, which already handles tasks such as getting the time from the GPS module or real-time clock, calculating the time in a variety of locations (ie, applying time zone offsets and daylight saving rules) and displaying the time in analog or digital format, along with the date, on the screen.

The software did not need any changes to support the new NTP (internet) time source since that was purposefully designed to appear as if it is a GPS module and thus the existing Super Clock GPS code already worked with it.

But we needed to add some new configuration screens to allow you to set the times when the tariff (ie, the cost per kWh) changes.

This new code stores this data in flash memory, to determine the current tariff based on the time and date and to change the clock colour and display the cost on the screen.

Changing the background colour of the display, based on the current tariff

Determining the current tariff

The tariff periods are defined simply by providing a list of times (to the nearest hour) and the new tariff which becomes active on that hour.

You should be able to find the tariff switching times (and indeed the amount charged under each tariff) by referring to your energy provider's website. (Actual amounts charged under each tariff should also be shown on your electricity bill).

So, for example, if the Peak tariff is active from 3pm to 9pm and the Shoulder from 7am to 3pm and 9pm to 10pm, you have four tariff changes per day.

These are: 7am (Off-peak to Shoulder), 3pm (Shoulder to Peak), 9pm (Peak to Shoulder) and 10pm (Shoulder to Off-peak). Since the previous state is already known, we need only specify the time and new state (Peak, Shoulder or Off-peak) for the Clock to be able to determine the current tariff. By setting the prices (in cents per kWh) of the Peak, Shoulder and Off-peak tariffs, the Clock can then look up and display the current tariff.

If there were two Peak periods during the day (morning and evening) then the same scheme could be used but you would have six transitions. We have made provision for this, even though no Australian electricity retailer currently has such a scheme.

We also allow you to choose whether a given transition is active on weekdays, weekends or all days. This is necessary because in some cases, the Peak period is not active on weekends.

Therefore, by making the transitions to the Peak tariff dependent on it being a weekday, they are ignored on weekends and the previous (usually Shoulder) tariff applies during those periods instead.

So the six "tariffs" which are listed on the Edit Tariffs page are actually the start times of the listed tariff period.

The default tariff periods are as follows:

Weekdays:	Shoulder from 7am to 3pm, Peak from 3pm to 9pm, Shoulder from 9pm to 10pm, Off Peak other times
Weekends:	Shoulder from 7am-10pm, Off Peak other times

To change these, access the Edit Tariffs page via the main menu and click on the Edit button next to the entry that you want to change. You can then set the transition period type (Peak, Shoulder, Off-peak or not in use), transition time (on the hour) and whether it applies on weekdays, weekends or any day.

For example, one tariff plan we saw specified Peak hours of 7am-11pm weekdays with all other times being Off-peak.

This can be reduced to two entries

1: Peak, 7am Weekdays
2: Off-peak, 11pm, Weekdays
All other tariff entries should be set to "not in use".

The choice of allowing the time to be set to the nearest hour was based on the fact that all the tariff offers we saw are timed on the hour. This greatly simplified programming and reduced the amount of data to be stored.

If at some point a retailer specifies a transition time that is not on the hour, we suggest that you round the transition time to the start of that hour if it is from a cheaper to a more expensive tariff (eg, shoulder to peak) or to the next hour if it is from a more expensive to cheaper tariff (eg, peak to shoulder).

This way, the tariff displayed will always be either correct or high for a short period. You won't be lulled into thinking electricity is a lot cheaper than it actually is.

period, makes it immediately apparent and does not occupy any extra space on the screen, so that the time and date can still be shown at the same size as before.

When the background is red (when the peak tariff is active) or green (when the off-peak tariff is active), the colours used are a dull red and dull green respectively.

This provides good contrast for the brighter foreground colours used. If we had used bright colours, the existing display would have become hard to read.

If you aren't happy with our colour choices, you could easily change them by modifying and re-uploading the BASIC source code.

We have named the three tariff periods "peak", "shoulder" and "off-peak".

The shoulder period may not be used by some electricity providers or in some regions, in which case you can simply ignore it and use peak and off-peak only.

These names could also be changed in the BASIC code, if necessary.

Every hour, on the hour, the clock checks which tariff is active and sets the screen background colour. The clock display on the screen is re-drawn with this colour and the background remains this colour until it needs to change again.

The more complicated changes to the program are in the menu code which is used to set the tariff times. An extra button has been added to the configuration screen to access these options (see screen grabs).

Building it from scratch

If you're building this Clock project from scratch (ie, you haven't already built the Super Clock), we recommend that you use the Micromite BackPack V2, which is available as a short form kit from the Silicon Chip Online Shop (see parts list). The following instructions are based on this.

Parts list – Tariff Super Clock

Micromite LCD Backpack V2 short form kit
[Silicon Chip Cat SC4237; includes laser-cut UB3 lid]
1 USB Type-A to mini Type-B cable
1 WeMos D1 Mini programmed as Clayton's GPS module (for NTP time; see April 2018 issue) [Jaycar cat XC3802] *Or*
1 VK2828U7G5LF GPS module [Silicon Chip Cat SC3362] *Or*
1 DS3231-based RTCC module with rechargeable cell [Silicon Chip Cat SC3519]
1 UB3 Jiffy box [Jaycar HB6013, Altronics H0203]
2.1mm inner diameter DC bulkhead socket [eg, Jaycar PS0522, Altronics P0622]
2.1mm inner diameter DC line plug [eg, Jaycar PP0510, Altronics P0634A]
1 USB lead with Type-A plug at one end
1 red DuPont-style jumper lead with female socket
1 black DuPont-style jumper lead with female socket

However, it can also be built using the original Micromite LCD BackPack kit; if you're upgrading an existing Super Clock, you will almost certainly be using this board.

While you can use the Micromite Plus LCD BackPack from the November 2016 issue (siliconchip.com.au/Article/10415), which has a faster processor and more memory, it is more tricky to assemble as it uses mostly surface-mounting components.

If you decide to do this, refer to the November 2016 issue for construction details. No software changes are required.

If ordering one of the BackPack kits from our Online Shop, you have the option for the microcontroller to be preprogrammed with the BASIC code for the Tariff Clock, so that it's ready to go as soon as it's powered up, or the original Super Clock code.

Besides the BackPack kit, the next most critical part is the time source: either a real-time clock module, GPS module or ESP8266 WiFi module. All three are available from the Silicon Chip Online Shop (see parts list for catalog codes) or from Jaycar. The few remaining parts needed are also shown in the Parts List above.

When choosing a time source, keep in mind that the GPS module will give the most accurate time if you have a good signal while the ESP-01 module (Clayton's Time Source) will get the correct time most quickly when power is first applied.

The real-time clock is quite accurate and only drifts a few seconds per year but you will need to set the time initially, from an accurate clock.

You could also use the very accurate "pips" marking the hour on many radio stations – the sixth "pip" actually marks the start of the hour (if you want to be pedantic, the start of the sixth pip marks the start of the hour!).

Construction

First, you need to build the BackPack module. Full instructions are available in the articles mentioned above.

It's basically just a matter of soldering the components in place where shown on the PCB overlay diagram and PCB silkscreen printing.

If you're building the recommended V2 BackPack, you can use the overlay diagram shown in Fig.2 as a guide.

There are just 22 components to fit to the PCB before plugging in and attaching the Touchscreen module. Three of these are SMDs (CON4, Q1 and Q2) so we recommend that you solder these first.

The clock configuration menu: here's where you choose between analog and digital formats and as shown, set the date, time, tariff and so on.

The standard analog clock display features location title, tariff currently being charged (which you set) along with today's day and date – plus, of course, the current time.

Here's the 12-hour digital clock, in this case set up for New York (you can set it for just about anywhere you want). Again, you get the time, day/date and electricity tariff.

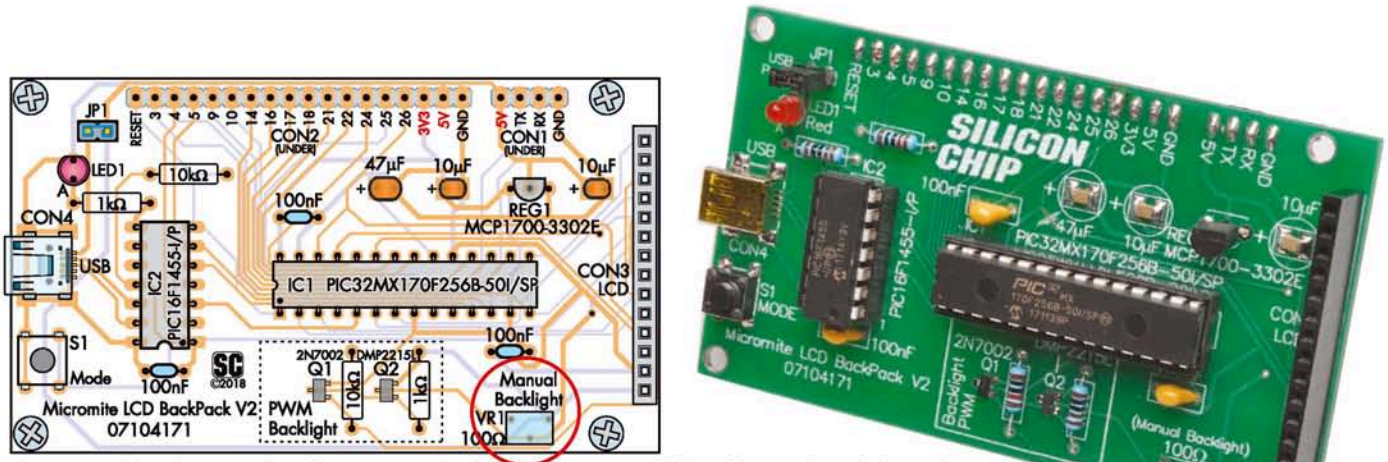

Fig.2: use this PCB overlay diagram and photo when assembling the BackPack board. Take care with the orientation of IC1, IC2, REG1 and LED1. The 2.8-inch LCD touchscreen module plugs into CON3 and sits on top of this board once it is complete. It is attached using tapped spacers in each corner. VR1 (highlighted in red above) should not be fitted if Q1 and Q2 are used, as recommended.

Start with CON4. Place a thin smear of solder paste on each of its pads, then solder one of its large mounting tabs first. Check that the small pins are lined up and then solder these.

Clean up any solder bridges using solder wick with some additional flux paste. Check carefully that these solder joints have been formed properly since it's easy to miss one or two.

After mounting Q1 and Q2, fit the resistors, then S1 and IC1/IC2. It's a good idea to use a socket for IC1 at least, and possibly IC2. Regardless of whether you're soldering in the socket or the IC, ensure that the pin 1 dot/notch is orientated correctly as shown in Fig.2.

Then solder the remaining components from shortest to tallest, ensuring that LED1 and REG1 are orientated correctly.

If using SMD ceramic capacitors, they are not polarised.

You don't need to fit VR1 if you have fitted Q1 and Q2 as recommended, and note that CON1 and CON2 are soldered to the opposite side of the PCB compared to the other components.

You can then plug in the LCD touchscreen to CON3 and mount it to the main PCB using 12mm tapped spacers and short machine screws.

Fault finding

Your BackPack should work first time but if it does not, the first thing to do is check that the correct supply voltages are on the IC1 and IC2 sockets and CON3 (the LCD connector).

Then check the 5V current drain for the full module, including the LCD; it should range from 100mA to 200mA, depending on the setting of the backlight (which is normally off at power-up if using software backlight control).

If it is substantially lower than 100mA, check that the PIC32 and the LCD are correctly seated in their sockets. With the LCD removed, the current drain should be about 30mA.

If it is a lot less than this, it indicates that the PIC32 processor has not started up and in that case, the 47µF capacitor is the most likely culprit.

It must be a tantalum or multilayer ceramic type; not an aluminium electrolytic.

If the current drain is correct, check that the Microbridge is working correctly. Does your PC recognise it as a valid USB device? Do you have the correct driver installed? Do you have your terminal emulator configured correctly?

You can check the Microbridge's operation by typing characters into your terminal emulator and watching for the LED to flash as they are received by the Microbridge.

Finishing it up

The next step is to wire up the time source. You have two basic options here.

The first is to keep the two modules separate (and later mount them separately in the box) and join them using a few short jumper wires with female DuPont connectors at either end.

The second is to solder a header onto the time source module so that it plugs into the BackPack header so that you only need to panel-mount the BackPack module.

Regardless of the method you choose, see the circuit diagram (Fig.1) to see which pins need to be connected where.

We used the Clayton's GPS (WeMos D1 Mini) option for our final prototype and chose the second option of plugging this into the headers on the BackPack as this made it much easier to fit it in a UB3 Jiffy box.

We used an eight-way stackable

Ths screen allows you to change any of the tariffs according to your area and electricity supplier. If you don't have a "shoulder", for example, simply leave blank.

Getting down to the nitty gritty, here's where you set the start time for each tariff. The software automatically assumes the next tariff start time will be the current tariff stop time.

Much the same as the previous screen but this allows you to set the next tariff type. You can also change the colour code if you don't like our green, black and red (see text)!

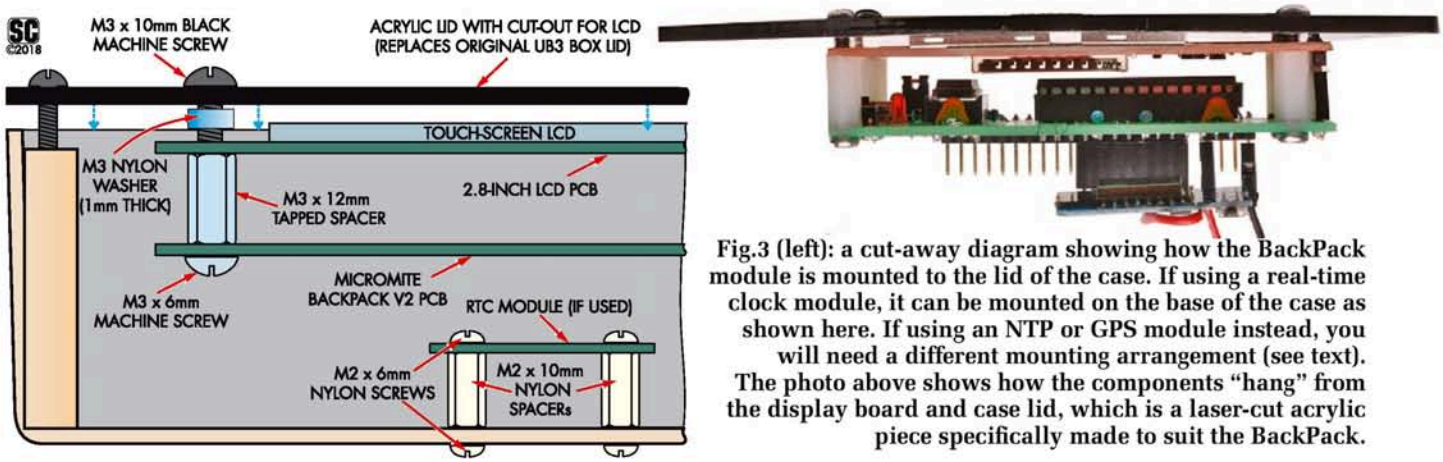

Fig.3 (left): a cut-away diagram showing how the BackPack module is mounted to the lid of the case. If using a real-time clock module, it can be mounted on the base of the case as shown here. If using an NTP or GPS module instead, you will need a different mounting arrangement (see text). The photo above shows how the components "hang" from the display board and case lid, which is a laser-cut acrylic piece specifically made to suit the BackPack.

header (the type often used for Arduino shields) to attach a socket to the D1 Mini board that plugs onto the Micromite's I/O header. See the photos for details.

To do this, we plugged the header onto the Micromite and cut off the pins except the ones that connected to the GND and 3V3 pins, and pin 22. Then we bent the pins over 90°.

The GND pin and pin 22 should line up with G and TX on the D1 Mini.

Solder these in place, then run a short length of light-duty hookup wire between the 3V3 connections on the Micromite and D1 Mini.

You can then plug this into the BackPack and power it up. Check that the blue LED on the D1 Mini starts flashing about once per second. The Micromite LCD should then show:

RTC not found. Checking for GPS

And after a second, it will show:

Searching for Satellites

The first 'lock' by the Clayton's GPS may take a while. Once that has been achieved, one of the default clocks will be displayed.

Now is a good time to set up the clock with the various time zones and clock formats that you need, noting that most of the settings are identical to the original Super Clock, with the addition of the tariff settings as described earlier. See the screen shots for examples.

Here's where you can set the huge amount the electricity suppliers are charging you for each tariff, up to 999c/kWh. When they get to $10.00/kWh – sorry, you're on your own.

Fitting it in a case

The Super Clock with Tariff Display lends itself to fitting a UB3 Jiffy box just like the original Super Clock and assembly is quite straightforward.

As before, we added a DC socket to the case so that the clock can be powered by a power source with a DC plug.

To attach the BackPack assembly to the lid, remove the four machine screws from the top of the display panel, and place the laser-cut lid on top of the display panel, ensuring the nylon washers are in place to keep the lid clear of the headers from the Micromite board.

Reattach the machine screws to hold the lid in place. For details, see Fig.3.

Cut an end off each of the red and black DuPont style cables, and solder to the DC socket, as shown in Fig.4. Solder the DC plug to the end of the USB lead, running the red wire to the centre conductor and the black wire to the outside conductor.

It's a good idea to check that the polarity is correct through the plug and socket assembly. Plug the USB cable into a powered USB socket and check that +5V is present between the red and black connectors.

If all is well, disconnect the USB plug, then drill a hole in the side of the case and mount the socket in the hole.

Attach the wires to the Micromite Backpack, with 5V to red and GND to black.

If you're mounting the time source separately, now is the time to do it. You can mount the Real-time Clock module as shown in Fig.3.

For the Clayton's GPS or actual GPS module, the easiest method is to attach them to the inside of the case using double-sided tape.

In both cases, it would be a good idea to attach them to the part of the case which will be at the top when using the clock.

Wire up the time source to the Micromite Backpack (or plug it in, if you're fitted it with a socket) before attaching the lid to the case, using using the screws included with the Jiffy box.

Depending on the case supplier, these screws may be long enough to go through the thicker laser-cut lid.

You will need to acquire slightly longer self-tapping screws if they are not.

The Micromite Super Clock with Tariff Display can now be powered up by plugging the USB lead into a USB power source.

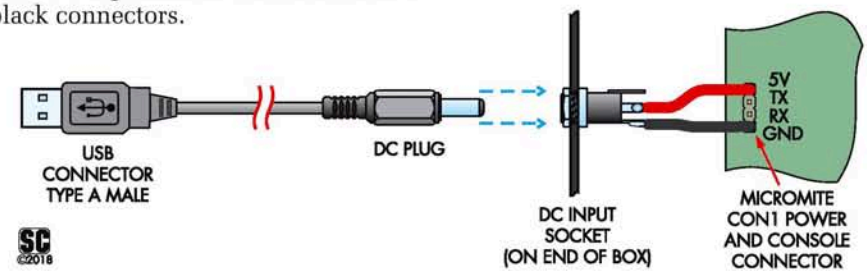

Fig.4 (above): mount and wire up a DC socket to power the BackPack board, as shown here. You can either use a 5V DC regulated plugpack or fabricate a USB power cable as shown, which can be plugged into a USB charger, computer USB port or other source capable of delivering 500mA at 5V.

Configuring the Micromite

If you used a PIC32 that was pre-programmed for this project then it should be ready to go, as the LCD setting will be pre-loaded along with the BASIC code. However, if you have loaded the Micromite firmware yourself or started with a plain Micromite BackPack kit then you will need to do this configuration yourself.

Note that since the Microbridge allows you to flash the PIC32 with the all-in-one Tariff Clock HEX file, if you are comfortable doing this, it's the quickest way to get up and running.

Otherwise, you will need the BASIC source code, which is supplied in the same package as the HEX file.

If you do want to load the Tariff Clock HEX file directly, this can be done using the pic32prog program, available from the Silicon Chip website.

Simply copy the *"SuperTariffClock.hex"* file into the same folder as pic32prog, then use the command:

```
pic32prog -d ascii:comxx SuperTariffClock.hex
```

As before, replace "comxx" with the COM port assigned to your BackPack. The clock should burst into life once the flashing is complete and you will then need to skip below to the "Finishing it up" cross-heading for instructions on connecting the time source.

If instead you will be loading the BASIC program into a pre-programmed Micromite chip, you need a terminal program which supports the XMODEM protocol for transferring files. TeraTerm Pro for Windows is recommended in the Micromite manual for this reason.

Connect the Micromite to your computer using a USB cable and open its terminal at 38,400 baud, then type the following command and press enter:

```
OPTION BAUDRATE 230400
```

This will change the baud rate on the Micromite immediately, so you will need to reopen the terminal at 230,400 baud to continue. Configure the LCD using the following command:

```
OPTION LCDPANEL ILI9341,L,2,23,6
```

This should cause the panel to flicker and clear. You can test that the LCD is working by typing:

```
GUI TEST LCDPANEL
```

This will draw random circles on the LCD screen. Press Ctrl-C to exit the test. Then type:

```
OPTION TOUCH 7,15
```

And then this command, to calibrate the touch panel:

```
GUI CALIBRATE
```

The Micromite will ask for four touches to be made on the panel, in the middle of the targets drawn on the LCD, and should respond with 'Done, no errors' if the calibration completes. You can then test the touch panel:

```
GUI TEST TOUCH
```

This program will allow you to draw on the screen using the touch panel. Press Ctrl-C in the terminal window to end the test.

Now that the LCD panel has been set up, the BASIC program can be uploaded. Run this command on the Micromite first:

```
XMODEM R
```

Then commence the transfer of the "SuperClockFonts.bas" file. This can be done in TeraTerm by using the File → Transfer... → XMODEM → Send... option. When the transfer has completed, save the font file as a library using this command:

```
LIBRARY SAVE
```

Then set the Micromite to receive the main program using the same command as before:

```
XMODEM R
```

This time, transfer the file "SuperTariffClockCrunched.bas" to the Micromite. We are using the 'crunched' version (ie, without comments) as the original version is too large to fit in the Micromite's flash memory (but the uncrunched file is included in the .zip file if you wish to examine it). Now set the program to start automatically using the following command:

```
OPTION AUTORUN ON
```

You can then power the unit off to finish construction.

Programming the chip

If you have purchased a BackPack kit, both chips should be supplied pre-programmed. If your PIC16F1455 is blank, you will need a PIC programmer to load the Microbridge HEX file (a free download from the Silicon Chip website) onto it.

If, however, you have a pre-programmed PIC16F1455 and a blank PIC32, or you wish to update the PIC32 to the latest version of the Micromite firmware, this can be done via the Microbridge and you do not need a separate PIC programmer. Even if you have both chips already programmed, you may still need to load the Microbridge drivers, so keep reading.

This procedure was covered in detail in the Microbridge article (May 2017; siliconchip.com.au/Article/10648) so we will only provide an abbreviated description here.

The first step is to get the Microbridge working as a USB/serial bridge. This involves installing the correct drivers (available from www.microchip.com/wwwproducts/en/MCP2200) and launching a terminal emulator and connecting to the COM port created by the Microbridge.

You can verify that everything is working correctly by typing characters into the terminal emulator and checking that LED1 on the BackPack flashes with each keystroke. Now close the terminal emulator. This is important as the programming operation will fail if it is still open.

You need a Windows computer for the next step. Run the program *pic32prog* (also downloadable from the Silicon Chip website) in a command prompt box with the command line:

```
pic32prog -d ascii:comxx yyyy.hex
```

Where xx is the COM port number created by Windows for the Microbridge and yyyy.hex is the file containing the latest Micromite firmware. For example, if your Microbridge was allocated the virtual serial port of COM6 and the file that you wanted to program was "Micromite_V5.04.08.hex", the command line that you should use would be:

```
pic32prog -d ascii:com6  Micromite_V5.04.08.hex
```

When you press Enter, pic32prog will automatically run through the programming sequence and then return to USB/serial mode. You can then launch your terminal emulator and when you press return you should see the Micromite command prompt (a greater than symbol ">").

SC

ElectroneX
electronics design & assembly expo
Sydney Rosehill Gardens 5 - 6 September, 2018
Meet us:
Booth D29

EMS Since 1999

LEACH

Reliable partner for electronic contract manufacturing

Make EMS project easier under our supply chain service.

FLEXIBLE PRODUCTION
- Small to medium batch order processing
- Flexible production with prompt responding

HIGH-MIX ENGINEERING
- Programming, testing, repairing

SUPPLY-CHAIN MANAGEMENT
- Components global sourcing and procurement
- Global logistics delivering goods around the world

DFM IMPROVING
- Help improve manufactura -bility from design period
- Lower production cost, More reliable circuit boards

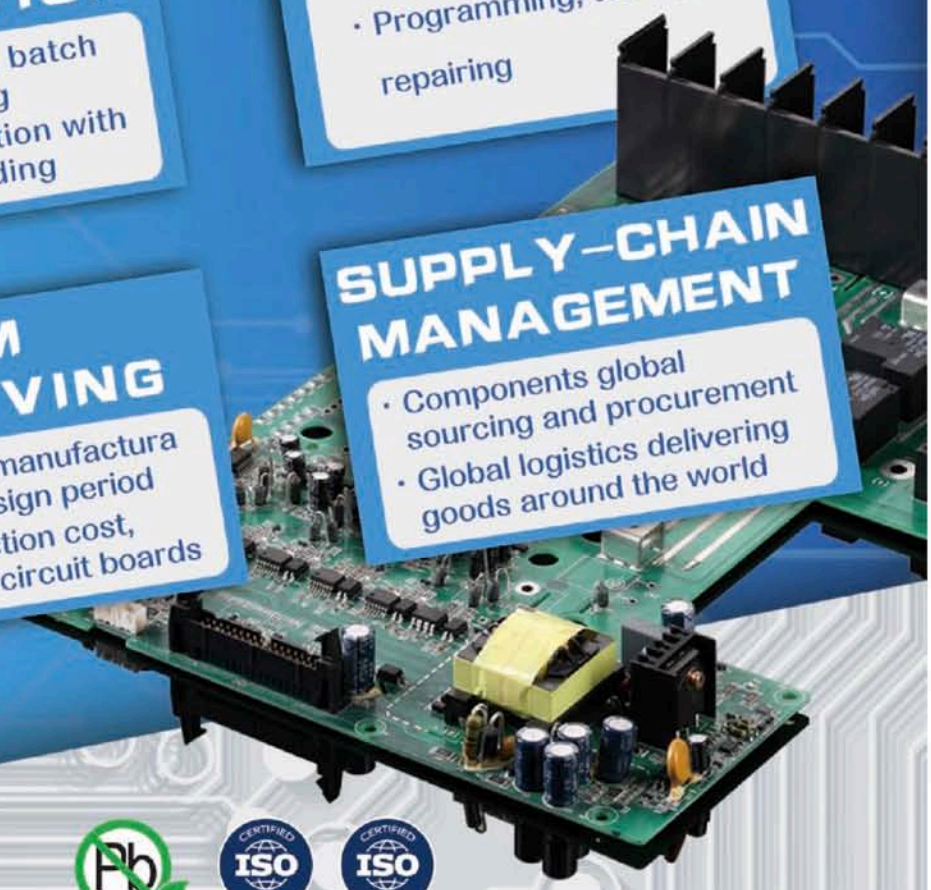

LEACH (HK) Co., Ltd
LEACH (SZ) Co., Ltd
Electronic Contract Manufacturing Turnkey Solution
info@leach-pcba.com
www.leach-pcba.com

SERVICEMAN'S LOG

Valve repairs are not for the inexperienced

Dave Thompson*

The internet and YouTube are wonderful sources of information for just about any task but the ease of obtaining information does not mean that you can fix the latest Mercedes sedan or an old valve amplifier, for that matter. Just because it looks easy on YouTube does not make you a competent serviceman.

Items Covered This Month

- Repairing valve amplifiers
- A problem safety switch
- Neff oven repair

*Dave Thompson runs PC Anytime in Christchurch, NZ.
Website: www.pcanytime.co.nz
Email: dave@pcanytime.co.nz

Painting is one of those things that most people think is as easy to do as changing a light bulb or hanging a picture; anyone can do it. I don't mean painting as in creating the Mona Lisa or Girl with a Pearl Earring, which requires a skill set very few people can ever master.

I mean painting as in covering the roof or walls of your house with paint. The general consensus seems to be that anyone with at least one working arm and a pulse can paint a house.

However, they would be quite wrong. Like anything, painting takes knowledge, experience and skill to pull off properly. To illustrate this, here's how a recent conversation between me and the paint-shop guy went:

Me: I'd like to buy some paint please.
PSG: And what paint would Sir be looking to buy today?
Me: Duck-Egg Blue please.
PSG: Would Sir be requiring oil or water-based acrylic, latex or enamel Duck-Egg Blue paint?
Me: Um...

And there's the kicker; while anyone can wield a paint brush, only those with the knowledge and experience to have the right preparation, paint, methodology and the skill to apply it will get a decent result. The servicing industry is no different; many of us will give fixing anything a go before admitting defeat and calling in a professional.

~OIL OR WATER-BASED ACRYLIC, LATEX OR ENAMEL DUCK-EGG BLUE PAINT?

I get the impression that many blokes would do their own brain surgery, as long as there was a video on YouTube showing how to do it and someone to hold the torch and mirror for them.

I once had a guy call me, asking whether I could sell him a boot disk. When I pressed him for more information, he said his computer wouldn't start up. He had an on-screen message telling him to insert a boot disk, hence the call asking if I could sell him one.

As politely as I could, I informed him that even if he did have a boot disk, it is doubtful he could get his computer going as he'd have to know what to do once he'd inserted it.

His reply was classic and one that I bet a few computer-repair people have heard: "If I come and get the disk, could I call you back when I get home and you can walk me through what to do next?"

Well, no. When I first heard someone suggest I walk them through repairing their computer over the phone, I was very polite in my response.

Yet as this became a more common occurrence, I began turning it around and asking people if they thought calling a mechanic and asking them to be walked through repairing their car engine or calling an electrician to walk them through fixing a dead circuit was acceptable.

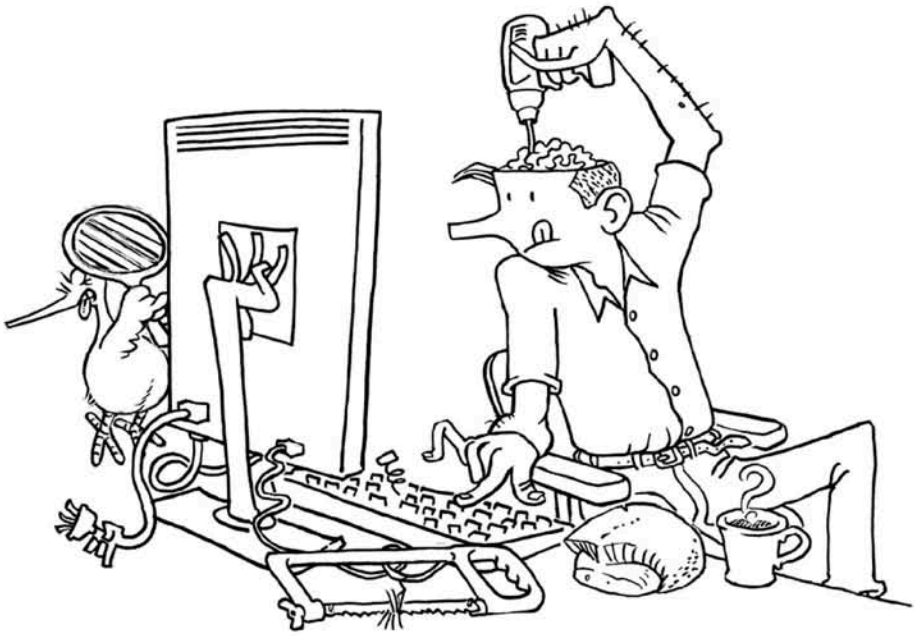

~MANY BLOKES WOULD DO THEIR OWN BRAIN SURGERY, AS LONG AS THERE WAS A YOUTUBE VIDEO SHOWING HOW...

When they inevitably answered no, I then ask them why they think it is OK to ask that of me. Most get all bent out of shape and tell me that all I have to do is push a couple of buttons anyway, so why would they bring their computer in when I could simply tell them what to do instead over the phone. Some offer to pay; most don't.

I point out that this is what I do for a living, and that if I fixed everyone's computer this way I'd be broke, but this doesn't seem to wash as a valid argument.

Typically, they either hang up or derisively inform me that they could find out on the internet anyway, so I might as well tell them now. At this point I usually wish them good luck, sign off and let them get on with it.

I coined a name for this type of person: a WOTAM, for Waste of Time and Money. There's also WOFTAM, for the really annoying caller.

Historically, we ANZACs especially are known for our genetic disposition for DIY culture and I heartily applaud us doing it ourselves, however most of us have the wisdom and good sense to draw the line when we are looking like we are getting out of our depth.

Years ago, when my motorbike engine was in bits on the floor of my flat and I wasn't able to put it back together properly, I hired an engine guy to help me with it.

When the power line coming into our just-bought house from the street started arcing, smoking and stinking of burnt insulation, I was straight on the phone to the power company before you can say CPR. I wonder how many guys would just break out the aluminium ladder and have a go at it.

The Darwin awards website is full of stories of people who didn't have that common sense or if they did, they chose to ignore it, eventually ending up on an ever-growing list of head-shaking anecdotes.

I mention this because recently I had an old valve amplifier in the workshop that someone had already had a go at repairing and as in a lot of cases like this, instead of helping, it made things worse. Most people seem to know somebody who is "good with computers' and so naturally they farm all their computer work out to this person.

In a similar vein, many of us know somebody who is "good with mechanical or electrical things" in general, so anything broken inevitably gets put this person's way for them to repair. It is only if they can't that the "professional" is commissioned to have a look at it.

While this way of going about things can be attributed to our DIY culture, my guess is that it is more a case of economics; getting stuff repaired costs money, and sometimes a lot of money.

Call a plumber out on a Saturday night to retrieve a stuffed toy from your overflowing toilet bowl and you can spend a week's wages on it.

Calling a white-ware serviceman out to discover why your fancy, just-out-of-warranty washing machine is throwing up an E09 error could mean the kids going without new gym shoes this term.

I get it; if we can get something fixed cheaper, then we're all for it. Unfortunately, as the old saying goes, we usually get what we pay for.

Repairing a non-working valve amplifier has a few "gotchas" for those who don't usually deal with tube gear. For one, not many of today's tinkerers are familiar with valves and how they work and two, these amps can kill you; typically many times over.

While we all expect mains-level voltages to be present in that vacuum cleaner or toaster oven we have on the work bench, we can add sometimes 200V or more to that floating around valve amplifiers and that's a funeral waiting to happen. If one isn't particularly wary of the potential danger, one will almost certainly get bitten.

Then you get the type of hobbyist who gets given an old valve amplifier or mantle radio to "have a look at" and the first thing he does is plug it in and try it out. Even before the fire department has finished dampening down the hot spots, he's figured out he probably should have checked it over before turning it on.

Another problem is spare parts; it isn't like the "old days" when you could go down to the corner store with a bag of valves, plug them into the tester and choose a new one from the spares on the shelf when the go/no go gauge told you your valve was "weak" or "gassy".

While good quality tubes are still available, unless you are the member of an antique radio club with access to personal stocks or discounts, or scored yourself a truckload of useful NOS (New, Old Stock) valves cheap on an auction site, you are probably going to get robbed by savvy, tube-selling vendors. Or you will buy a newly-manufactured, Chinese or Eastern Bloc-made valve that may be excellent, mediocre or terrible, depending on the individual tube.

Compared to say, the 1950s, practically nobody makes valves any more. Fortunately for tube enthusiasts, the relatively sudden advent of the transistor resulted in literally warehouses stacked full of now-unwanted and unsold valves.

Eventually, these found their way into the hands of either recyclers or people with enough vision to realise they needed to be saved for future requirements. Sadly, many were lost to landfills, but enough were saved to keep the likes of amplifier manufacturers and tube enthusiasts in valves for years to come.

Obviously, as this limited NOS stockpile dwindles, the harder it becomes to obtain certain types of valves, which pushes up the cost.

Matched-pairs of well-known audio output valves can command eye-watering prices these days. You'd think those very few valve manufacturers still churning out tubes today would fill this particular vacuum, ka-boom!

But sadly, the handful of factories based in former Soviet republics and China who still make valves don't make them with the same level of love and attention that the likes of RCA, Sylvania, Mullard or Philips made them with back in the day.

Those well-known companies produced valves the old-fashioned way, in huge factories using thousands of skilled workers whose entire careers consisted of making parts for, or assembling, valves.

Glassblowers, wire-makers, machinists, engineers, metallurgists, chemists, assemblers, fabricators and a myriad of other professionals depended on the valve market to earn their crust. I'll bet the advent of the transistor didn't please everyone!

The majority of today's tubes are made on highly mechanised production lines with minimal human interaction, so modern valves are often viewed with great mistrust and even disdain by tube aficionados.

Repairing any valve device means having access to replacement valves. One can usually fudge one's way through a solid-state device repair using various other transistor or module types; doing this in an equivalent valve-powered device can be a bit trickier.

And many of the peripheral components, such as bypass capacitors and plate resistors, were chosen for a very specific valve; simply plugging in another one that happens to fit the empty socket is a recipe for disaster.

In the same way we used transistor substitution books to find an equivalent transistor for one that has a weird number (or no number at all), technicians of yesteryear relied on telephone-book-thick manuals for valve substitutions.

You could cross-refer different valves to see if a 12AX7 could be used instead of the ECC83 specified in the schematic (in this case you can; they're the same valve).

Most books also offered possible equivalents, along with tweaks you'd have to make to the circuitry in order to use the suggested alternative.

If all else failed, you could look up the tube's specs and match it with another candidate; as long as power curves, plate and grid voltages and current, amplification factor, mutual conductance and a host of other values corresponded, or these could be achieved with circuit tweaks, you were good to go. Generally speaking, if the book said it would work, it would.

This level of certainty was down to the consistency of valves produced back then. The same doesn't hold true today, where automated manufacturing creates differences between valves even from the same production lot.

As these differences became more of a problem, circuit design evolved to cope, with the likes of variable biasing and adjustable feedback loops incorporated in an effort to 'balance' performance.

A novice serviceman might get caught out after replacing valves and neglect to adjust biasing, which could at best result in a bad-sounding amplifier and at worst, result in output transformer or tube failure. There are a few traps for young players then, but by far the biggest trap is the lethal voltages present in most valve amplifiers and radios.

Even battery-powered devices have the potential to hurt the unwary. Informal workshop rules were imposed to keep people safe; putting one hand in a pocket while working on a live chassis meant it was less likely the serviceman would get a shock through the chest and across the heart, which is potentially fatal.

One sore hand or arm from a high-voltage belt is God's way of telling you to be more careful!

Another rule is to avoid wearing rings or other jewellery that could short out something inside the case. Gold chains around the neck are a really big no-no! Yet another rule advises no fiddling with live hardware while chemically altered, on the phone or otherwise distracted. My own mantra is that I suspect that every valve amp is constantly trying to kill me. This usually keeps me alert.

This amp in question is a 1970s Fountain; a 10W, push-pull stereo amplifier made in New Zealand using common valves. However, it had been sitting unused for a long time and the "repair guy" had simply plugged it in and turned it on to see if it would work. It did, as a smoke generator! He pulled the power as soon as he saw smoke

but the damage had been done. Time to call the professionals!

After removing the case and giving the chassis a puff with compressed air, I noted several power-supply capacitors were blackened - possibly the source of the smoke. Capacitors "drying out" or otherwise degrading when not being used are a major cause of hardware failure, valve or solid-state.

While old caps can sometimes be electrically recovered (see the Capacitor Reformer project in the August & September 2010 issues; www.siliconchip.com.au/Series/10), I make a practice of changing them on older amps as a matter of course, especially the power smoothing and output coupling capacitors. They are (usually) relatively cheap, readily available and easy to replace, so it makes sense to do it.

With the caps replaced, I removed the valves and plugged the amplifier in to my light-load and auto-transformer, gradually increasing the AC voltage. No bright lights or smoke, so with supply input at 230VAC, I measured voltages at the usual points. While I had a typical 6-ish volts AC for filaments, I had only a fraction of the hundreds of volts I expected on the plate pins of the valve sockets.

Tracking back, I could see the power supply's transformer fed several carbon composition series dropping resistors adjusting voltage for each stage of the amplifier, with the resistors bypassed to ground by now-replaced dead capacitors. Though the resistors looked OK, I suspected some might have gone open-circuit.

I shut everything down and replaced them all with new, 2W alternatives from my parts boxes.

The valves, an ECC83, two EF86s and four ECL86s, tested OK on my Valve Heaven DIY tube tester (siliconchip.com.au/link/aak5), and after plugging them all back in and powering up, a faint but gratifying hum gradually sounded from my test speakers.

A signal injector clipped to each input now confirmed everything else worked as expected. The pots and switches required a squirt of cleaner and a bit of working to settle them down but once done we were up and running and sounding great. Job done.

Tripping the RCD

A. L. S., of Turramurra, NSW, previously wrote of a problem with one of the safety switches (RCDs) in his home. He had to tackle another similar fault about a year ago but this time, it had a different cause...

There are two safety switches in my household wiring and the repair of the first one, which protected half the power outlets in my house, was described in Serviceman's Log in the October 2016 issue.

Imagine my surprise when the second one, which protects the front part of my house, started to do the same thing and cut out intermittently for no apparent reason!

After the previous adventure, the first thing I checked was the RCD itself but it seemed perfectly fine and tripped exactly as it was supposed to with a leakage of 30mA (as confirmed with an RCD tester). It was also cold to the touch so I discounted it as being the culprit for the time being. I would have to think a little harder to figure out this one.

The RCD seemed to trip and cut the power when I was in the downstairs workshop which has many mains-powered test instruments, chargers, powerpacks, computers, an air conditioner and even a freezer.

The first time it cut out I didn't take too much notice what was actually plugged in and switched on but as a precaution, I turned off all the power outlets except for the freezer.

Returning to the workshop, I began to turn things on one by one hoping it would isolate the offending item but it didn't trip again. So I thought maybe the freezer was the problem and it would only trip the RCD when the thermostat cut its compressor back in. So I waited patiently for its motor to come on but when it did, still nothing happened.

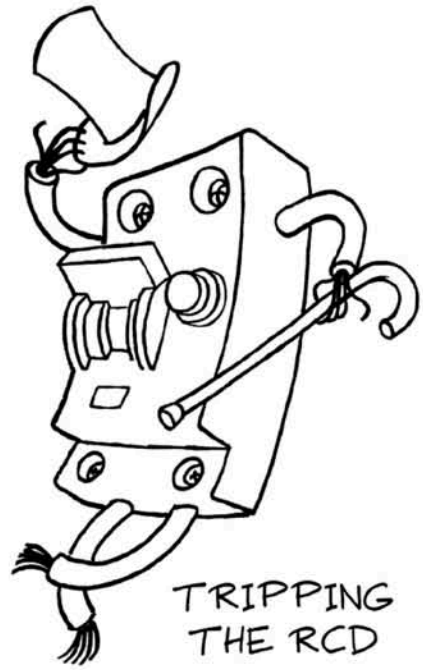

I put it down to a possible surge or overvoltage and carried on regardless.

Then one day, I switched on my Audio Precision ATS-1 audio analyser to do some tests on a subwoofer amplifier and the safety switch cut out about five minutes later. Repeating the exercise, the same thing happened, so the instrument was quarantined for later investigation!

All went well for about a week but then, 10 minutes after I switched on my oscilloscope, the circuit cut out again. I couldn't believe it! Surely two instruments which were normally very reliable couldn't go south at the same time. I checked them both for possible earth leakage which could trip the RCD but they seemed OK.

What I did notice that both instruments were plugged into the same power board. This is a supposedly good quality Jackson model PT8888 made in China and boasts EMI/RFI filtering, surge protection and overload cut-out. It has eight outlets, two of which are widely separated to fit large plugpacks.

It is made of very strong metal and was expensive when purchased from a reputable electronics retailer. Fearing the culprit may be one of the eight devices plugged in, I powered them on one-by-one to see if the safety switch would cut out but again, nothing happened.

Then one day, switching on another instrument, it tripped the RCD off once again. This was another different ATS-1 analyser which at first made me think there may be a design flaw with them but it was also plugged into the

Servicing Stories Wanted

Do you have any good servicing stories that you would like to share in The Serviceman column? If so, why not send those stories in to us?

We pay for all contributions published but please note that your material must be original. Send your contribution by email to: editor@siliconchip.com.au

Please be sure to include your full name and address details.

Jackson power board. So I switched off everything connected to the power board and I also switched the power board off, both at the wall and via its onboard power switch.

Having quarantined everything on that power board, the circuit was fine for the next week. I then decided to have another look at why those items connected to that power board were triggering the RCD.

I had to do it during the day when everyone was at work because the TV was on the same circuit and my family members complained loudly and bitterly every time I cut the power during their favourite programs.

I started by plugging the Jackson board back in and then plugging each of the eight items in, one by one. After a while, the safety switch cut out. Making this more difficult to diagnose was the 5-15 minute delay between adding a device and the power cut.

At this point, I tried switching the board on and off with its own onboard switch. At one stage, I had nothing plugged in at all and upon switching the board on, the RCD politely cut out and therefore identified the Jackson board to be the culprit at last!

The board looked very professional but on closer inspections, had dubious approval markings and even had a strange warning which read "AS/NZS TESTING NOTE This device contains voltage limiting devices, test at 250V only".

A continuity check indicated 409kΩ between Active and Earth which was suspect because any varistors it used for surge protection would have a much lower resistance at full mains voltage and this would be enough to leak more than 30mA to Earth.

Normally I would throw such a board away but it was so expensive and its metal case was really handy in the workshop because it was so rugged. Not only that but I had another one exactly the same so I wanted to find out the reason for the failure. I decided that a repair may be possible and that the result may assist anyone else who has a problem with this model or similar models.

My first rather optimistic theory was that a spider or insect had crawled into a small gap between the metal panels and was cooked and carbonized, creating a residual current between Active and Earth.

So I tried to undo the two small

Neff oven repair

J. B., of Melbourne, Vic, recently had to delve into the innards of his oven. What seemed like a simple light bulb replacement turned into a complex and technical repair...

I'm a self-taught radio technician from the 60s and later became a black and white TV valve jockey, eventually getting into colour TV and tape recorder servicing.

For a day job, I am an aeronautical and mechanical design engineer and I've retired as an airworthiness regulator. I now repair aviation headsets and represent a US/UK Company using neural network synthesis to find intermittent faults in cables, connectors and chassis.

One day, as my wife and I were preparing for the evening meal, we turned on the light in our Neff oven and it blew with a blinding flash. I replaced the bulb but the new one failed almost instantly. On inspection, the filament support wires inside the bulb had touched. This had caused some kind of internal damage to the oven so after removing what was left of the failed bulb, I traced its wiring to the Operations Module.

This module receives DC power from a switchmode supply and signals from a switchboard. The Operations Module contains the microprocessor, driver integrated circuits and numerous relays. The light circuit had an SMD NTC thermistor in series with the relay coil (just a guess as the device was a charred blob). The PCB tracks had also been burnt beyond recognition.

Whilst there was some separation between the 230VAC light track and adjacent low voltage control tracks, the separation was insufficient for this failure. The torching thermistor burnt a PCB track which powered a suite of relay coils and conducted 230VAC to the driver ICs. I repaired the PCB and the burnt tracks and soldered a 10Ω resistor where the thermistor used to be.

On reassembly and power application, the oven went berserk; the door lock mechanism continued to cycle closed then open, the replacement oven light would go on but not turn off and the circulating fan in the heating space accelerated to take off power and stayed there. So I decided to pop the module back out and take some voltage readings.

I found that when the microprocessor outputs went high, a hex Darlington switch with diode protection turned on but not off. Four days had passed since the lamp blew and my wife was getting impatient. Plan B was a replacement Operations Module; none in Australia, a few in Germany, an estimate of a one month lead time and some $500.

Upon further investigation, I became more certain that there was something wrong with the Darlington IC. Replacing one SMD in the middle of a 'farm' was a challenge; I'm not practised at this but the internet was very helpful.

I removed the immediately adjacent relay and wrapped the remainder of the components and tracks first in paper and then in aluminium foil, leaving exposed only the IC to be removed, along with a few adjacent components. I cautiously applied a heat gun to the IC and in seconds, the parts were removed whilst the masked components remained in place.

This was actually my second attempt as I first practised the technique on a disused board. I then tidied the PCB tracks and fitted the replacement IC and other parts. The original relay had a 9V DC coil but I only had a 12V DC replacement on hand, so I fitted that and ordered some 9V relays to swap in later if necessary. The oven was reassembled, power applied and all functions tested serviceable.

The roast lamb which followed was delicious and I've banked some brownie points for the future; I focussed on the time difference between repair and overseas supply, definitely not the money saved!

Carefully measuring and recording voltage readings in the unserviceable state then comparing these with values expected from first principles was the key to figuring this one out. Impatience and a hasty dismissal of what seemed to be zero voltage when in fact there was some small residual led me down a wrong path.

But most importantly, when replacing the lamp in your oven, make sure the new one is designed for high-temperature use.

DID YOU MSS OUT?

Is there a particular project in SILICON CHIP that you wanted to read – but missed that issue? Or perhaps a feature that really interests you?

GRAB A BACK ISSUE . . . WHILE THEY LAST!

The SILICON CHIP Online Shop carries back issues for all months (with some exceptions!) from 1997 to date. Some popular issues are sold out, and some months are getting quite low.

But if you want a particular issue, you can order it for just $12.00 INCLUDING P&P* – while stocks last!

The following issues are still available (at time of going to press):

1997 – all except August and September
1998 – all except March
1999 – all except February
2000 – all except April
2001 – all except October & December
2002 – all except June & July
2003 – all still available
2004 – all still available
2005 – all still available
2006 – all except January & October
2007 – all still available
2008 – all still available
2009 – all still available
2010 – all still available
2011 – all still available
2012 – all except December
2013 – all except February
2014 – all except January
2015 – all still available
2016 – all still available
2017 – all still available
2018 – all still available

HOW TO ORDER WITH YOUR CREDIT/DEBIT CARD#:
Don't forget to let us know which issues you require!
Via email: silchip@siliconchip.com.au (24 hours a day)
Via the net: siliconchip.com.au/shop/ (24 hours a day)
By mail: Silicon Chip, PO Box 139, Collaroy NSW 2097
By phone: (02) 9939 3295; Mon-Fri 9am to 4.30pm
** Australia only. O'seas? email for a quote*
 # Visa/Mastercard only.

OH NO! THE BACK ISSUE YOU WANT IS SOLD OUT!

DON'T PANIC AND STAY CALM! We can still help you! The SILICON CHIP website (siliconchip.com.au) houses complete issues from mid 1997 on. You can browse a preview version – and if it's what you want, you can purchase a digital edition (complete magazine) .

Full details are given where you browse the issue. And if you're a current digital edition subscriber, there are even more attractive rates!

SPEAKING OF SUBSCRIBING . . .

That's the one way to guarantee you'll never miss an issue! Not only that, you'll $AVE money on the over-the-counter price.

Full details are at siliconchip.com.au/shop/subscriptions

screws underneath to have a quick look. However, these proved to be of a triangular design and none of the hundreds of bits in my toolkit would fit.

They were also countersunk so impossible to butcher with a grinder or hacksaw.

The hardware shop didn't have anything either but fortunately, the local Turramurra cobbler (yep, the cobbler!) was able to grind one up in about two minutes and we had the back open just a few minutes later.

Back in the workshop, I took a good look at the innards. There was a small PCB which had three varistors, type 14D147K (rated at 275VAC) across each of the rails and one 100nF mains-rated capacitor. That was about it; so much for the extravagant claims about RFI/EMI protection!

It also had an integral 10A circuit breaker and an onboard neon-lit mains switch. It was perfectly clean and no cremated insect or spider could be seen!

So the PCB had to be removed because all the suspect components were underneath. This was a real pain because it was held in place by a heap of big soldered connections to the long brass outlet rails and to the chassis mounted switch.

After desoldering everything, the chassis also had to be bent back 90° to release the PCB-mounted circuit breaker. Then I was able to remove the components one-by-one and check them for continuity. As luck would have it, the last varistor I removed proved to be the faulty one.

While the PCB was bare, I replaced all three varistors with similar types and put it all back together then stood back and switched it on. It has given no trouble since.

It does bring home the fact that components used for safety can sometimes fail in strange ways and maybe cause other problems like arcing or fire. I am not sure why this one failed; it may have been shock, vibration or humidity or a mains spike but I can never be certain.

What is certain is that just about all "surge protected" powerboards use exactly the same components so it's something to look out for and it is a good idea to switch power boards with integral protection or filtering off and/or unplug them when not in use, to protect them from lightning damage and so on. SC

Security, I.T. & Communications.

THE LATEST & GREATEST TECH

Jaycar Electronics

HIGH SPEED, ULTRA FAST

$139

DUAL BAND AC1900 USB WI-FI ADAPTOR YN-8436

ASUS USB-AC68 instantly upgrades your desktop or laptop to the newest 802.11ac technology with Wi-Fi speeds up to 1300 Mbps (5GHz) and 600 Mbps (2.4GHz). 3-position antennas and a cradle to adjust for best performance.

$169

AC1200 VDSL/ADSL MODEM ROUTER YN-8440

Combined dual band Wi-Fi speeds of up to 300Mbps (2.4GHz) + 867Mbps (5GHz). Support more devices with stable connections.

$389

10 PORT ETHERNET SWITCH WITH TWO 10GBPS PORTS YN-8430

ASUS XG-U2008 10 port un-managed ethernet switch for advanced home and business networking.

- 2 x ultra-fast 10Gbps ports for high speed applications
- 8 x gigabit 100/1000Mbps ports.

$529

UHF TRANSCEIVER XRS-330CP PORTABLE PACK DC-9056 *See website for details.*

2 times faster than most UHF CB radios. Smart, adaptable, rugged. Enabled by Bluetooth® technology you can create and share scan lists. OLED speaker mic.

- Access to over 20,000 receive frequencies

Premium NVR & PIR Camera Kits:

Swann Security Made Smarter

Get amazing image definition with the latest 5MP & 4K cameras.

- TRUE DETECT™ PIR MOTION SENSING TECHNOLOGY
- BUILT-IN MIC & SPEAKER
- BUILT-IN SIREN VIA SPEAKER (SPOTLIGHT CAMERA ONLY)
- 1 CABLE PER CAMERA POWER OVER ETHERNET (POE)
- 2TB HDD, 3 USB PORTS
- IP66 RATED

$999ea

8 CHANNEL 4K NVR KIT WITH 4 X 5MP PIR CAMERAS
BULLET QV-9070 **DOME** QV-9072
See website for details.

$1299

8 CHANNEL 4K NVR KIT WITH 6 X 5MP PIR CAMERAS QV-9074

4 x bullet & 2 x dome cameras. *See website for details.*

$1499

8 CHANNEL 4K NVR KIT WITH 4 X 4K PIR BULLET CAMERAS QV-9080

See website for details.

FOR FULL ARTICLE VISIT: jaycar.com.au/resolutionmatters

Learn About... NETWORK VIDEO RECORDER (NVR)

A Network Video Recorder (NVR) records video footage in digital file format to a disk drive or USB flash drive. Your NVR will connect to IP Cameras using wired or wireless network access. With the latest high resolution 5MP & 4K cameras get amazing image definition, zoom in really close with incredible clarity and detail. Easy to set up, with remote access, and advanced notification capability.

FOR FULL ARTICLE VISIT: jaycar.com.au/nvr

FLASHFORGE® FULL FUNCTION ADVANCED 3D PRINTERS

High quality with stunning print resolution supporting multiple filament types and FlashPrint slicing software. Select from enclosed design or extra large professional FFF (Fused Filament Fabrication) with steel frame, ABS panels and 5" touchscreen. Perfect for the architectural, construction, science, manufacturing and education sectors.

INVENTOR ENCLOSED DUAL FILAMENT TL-4230 **$1599**
GUIDER II EXTRA LARGE TL-4240 **$2499**

Not available in all stores. Please call your nearest store to check stock availability.

FROM $1599

$149

720P OUTDOOR TRAIL CAMERA QC-8041

Monitor local wildlife or use as an outdoor security camera. 10sec-10min motion detection for day/night recording. Water resistant housing. Time lapse recording. 2.4" LCD.

- Up to 15m infrared range
- Requires 8 x AA batteries

$199

7" LCD WIRED VIDEO DOORPHONE QC-3880

Provides clear vision to identify visitors. 2-way audio intercom. Electronic door strike & gate unlock. 16 selectable melodies. IP44 rated.

ADDITIONAL 7" LCD MONITOR TO SUIT QC-3882 **$159**

Buy Online, Click & Collect In Store.

CLICK & COLLECT

Catalogue Sale 24 June - 23 July, 2018

To order: **phone 1800 022 888 or visit www.jaycar.com.au**

Wi-Fi:

WAS $69.95
$59.95
SAVE $10

YUN WI-FI SHIELD XC-4388
Allows you to easily program and operate your project over Wi-Fi and allow it to access the Internet. Contains a tiny Linux computer with Wi-Fi, ethernet & USB.
- Wi-Fi, Ethernet, USB and Serial interfaces
- Web configuration interface
- 77mm x 54mm x 26mm

Ethernet:

$39.95

ETHERNET EXPANSION MODULE XC-4412
Cheaply and easily monitor your projects wherever you are with this module. Use as a webserver to check your status when you're away from home.
- 10/100Mb Ethernet port
- Reset button
- 69(L) x 48(W) x 14(H)mm

Bluetooth®:

$29.95

BLUETOOTH® V4.0 BLE MODULE XC-4382
Brings the latest Bluetooth® 4.0 standards to your Arduino® project. Configurable as master or slave. Provides a serial communication channel.
- Serial interface with AT commands

$9.95

RFID LOCK SHIELD KIT XC-4215
Allows your Arduino® to control a door lock using an electric strike plate and one of a number of commonly available RFID modules.

$26.95

NFC SHIELD FOR ARDUINO® XC-4542
Brings Near Field Communication technology to your Arduino® project. Allows reading of cards, tags and smart posters.

$19.95

RFID READ AND WRITE KIT XC-4506
Allows you to both read and write MiFare-Type RFID cards. Include one credit-card style tag and one key-fob style tag.

FROM **$3.95**

SPARE RFID CARD & FOB
1kB data space.
CARD ZZ-8978 **$3.95**
FOB ZZ-8970 **$4.95**

Raspberry Pi:

$3.95

STACKABLE HEADER HM-3228
Essential for building your own custom hat for Raspberry Pi. Perfect fit for the 40 pin GPIO header.
- 2 x 20 stackable header

$7.95

COPPER HEATSINK HH-8584
Helps dissipate extraneous heat. Self adhesive pads for peel and stick use.
- Pack of 2

$9.95

RTC CLOCK MODULE XC-9044
A battery backed clock module that uses I2C to communicate with the Raspberry Pi. Five Pin header that plugs straight onto the Pi's GPIO pins.

$14.95

OFFICIAL RASPBERRY PI 3B CASE XC-9006
Snap-together case with numerous removable panels. Stylish red and white design. Easy no-tools assembly.
- Four Rubber feet included

$24.95

16GB MICROSD CARD WITH NOOBS XC-9030
Comes pre-loaded with NOOBS software for easy install of Raspbian operating system. Includes adaptor.

$59.95

2.8" TOUCHSCREEN XC-9022
Compact, portable display plugs straight into the top of Raspberry Pi.
- 320 x 240 pixel
- Resistive touch

$3.95

INFRARED RECEIVER MODULE XC-4427
This module can read the signals sent by most IR remote controls. Pair it with the TX Module (XC-4426) to make a universal remote control.

$4.95

INFRARED TRANSMITTER MODULE XC-4426
Use this device to send data over infrared. Combine with RX module (XC-4427) for simple wireless communication.

$9.95

2.4GHZ WIRELESS TRANSCEIVER MODULE XC-4508
This module allows communication on the license free ISM band. Supports on-air data rates of up to 2Mbps. 1mW output power.

$9.95

IR REMOTE CONTROL XC-3718
Add IR remote control to your next project. Compact design with 21 buttons including numbers and channel controls.

$13.95 ea

433MHZ WIRELESS MODULES
Pre-built 433MHz wireless transmitter / receiver modules. Feature ASK encoding. Ideal for devices using short data bursts such as remote controls, trigger pulses etc.
TRANSMITTER ZW-3100
RECEIVER ZW-3102

$19.95

RF TRANSCEIVER MODULE XC-4522
Adds a versatile 433MHz radio to your project allowing two-way wireless communication. Includes antenna. Controlled via SPI.

Arduino Compatible

Raspberry Pi Compatible

STEP-BY-STEP INSTRUCTIONS AT:
jaycar.com.au/iot-wireless-sign

IoT Wireless LED Sign:

This cost effective IoT dot matrix signage solution is a great addition to your shop, office, club or home. No need to fiddle with cables and complex apps, simply connect the IoT wireless sign to your Wi-Fi network and use the inbuilt web interface to display a clock or scrolling message. Based on the popular ESP8266 Wi-Fi MCU, it's easy to modify, expand, and create your own invention.
Soldering skill required.

SKILL LEVEL: INTERMEDIATE
TOOLS: SOLDERING IRON, SOLDER

WHAT YOU NEED:

WI-FI MINI ESP8266 MAIN BOARD	XC-3802	**$24.95**
LED DOT MATRIX DISPLAY	XC-4622	**$39.95**
5V 1A MAINS ADAPTOR	MP-3144	**$17.95**
28 PIN HEADER TERMINAL STRIP	HM-3211	**$0.85**
PROTOTYPING SHIELD	XC-3850	**$4.95**
7407 TTL HEX BUFFER IC	ZS-5807	**$1.65**
10K OHM 0.5W RESISTORS - PK8	RR-0596	**$0.55**

VALUED AT $90.85

NERD PERKS CLUB OFFER
BUY ALL FOR $69.95
SAVE 20%

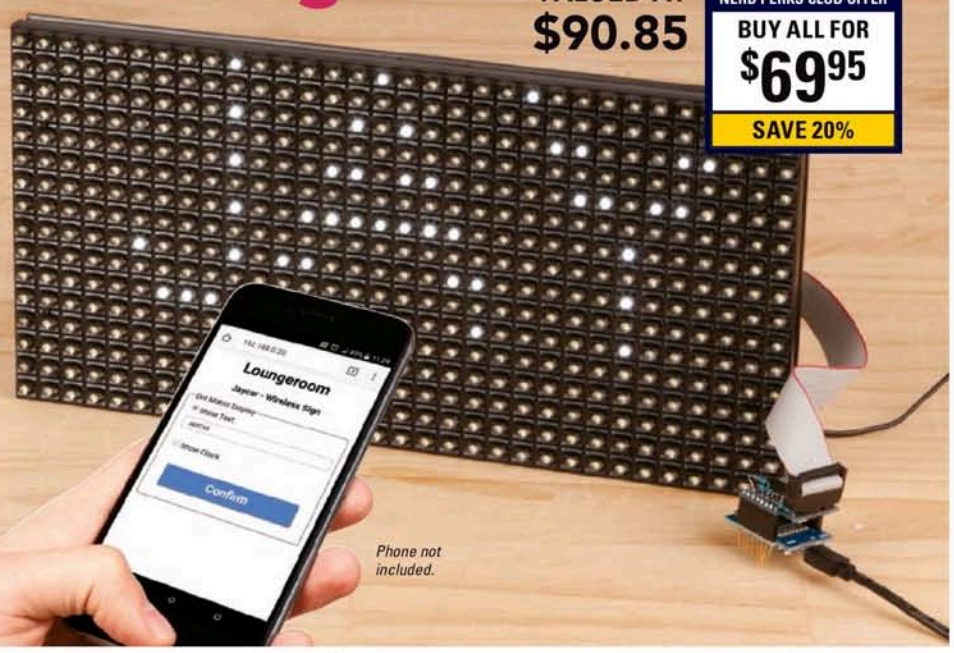

Phone not included.

SEE OTHER PROJECTS AT:
www.jaycar.com.au/arduino

Board not included.

$12.95

ACRYLIC BASE FOR UNO AND BREADBOARD PB-8840
Create an easy to use prototyping station. Measures 120mm x 83mm. Self-adhesive rubber feet. Plastic mounting screws for Arduino® board.

$9.95

BREADBOARD POWER MODULE XC-4606
Adds a compact power supply to your breadboard. Power from a USB socket or DC. 3.3V or 5V switchable.

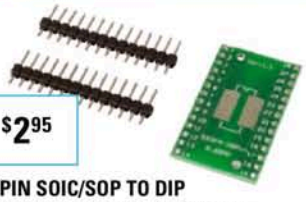

$2.95

28 PIN SOIC/SOP TO DIP BREADBOARD ADAPTOR PI-6530
Allows SMD IC's and other smaller pitch components to be used with standard 0.1" prototyping equipment.
• Header strip included

$14.50

HEATSHRINK PACK WH-5520
1 length each of 7 different colours in 7 different sizes ranging from 1.5mm dia to 20mm.
• Sizes: 1.5, 3, 5, 6, 10, 16 & 20mm

$14.95

JUMPER LEAD MIXED PACK WC-6027
A mixed pack for your Arduino®, breadboarding and prototyping projects.
• 150mm long
• 100 pieces

$11.50

POLYMORPH PELLETS NP-4260
Softens to be formed into any shape at around 62 - 65°C. It can be drilled, sanded, ground, machined or heated and reformed again and again.
• 100g bag of 3mm pellets

$12.95

3 POLE INLINE SCREW-IN CABLE JOINER PT-4660
Suitable for LED lighting, CCTV security, solar and marine power applications. 20A 600V. IP68 rated.

$3.50

SPDT 250VAC 5A MICRO SWITCH SM-1050
Standard sized micro switch without lever. Spade terminal connection. Compatible with arcade pushbutton actuators (sold separately).

$1.50

SPDT MICRO SLIDE SWITCH SS-0834
A great addition for projects that need a small on-off switch.
• 0.2A at 24V, 0.5A at 12V

$19.95

DIN RAIL ENCLOSURE 6U WITH CLEAR LID HB-6273
Perfect way to protect and mount projects based around Arduino®and Raspberry Pi.
• 95mm x 106mm x 58mm including clip
• Side knockouts for terminal connections

$34.95
HB-6294

$44.95
HB-6296

ALUMINIUM ENCLOSURES WITH CLEAR ENDS
Sturdy and sleek. Slots for easy PCB mounting. Clear end caps. Sealing gaskets.
SILVER 115 X 51 X 119MM HB-6294
BLUE 177 X 61 X 89MM HB-6296

4 Channel 1080p Wi-Fi NVR Kit

WITH 4 X 1080P CAMERAS

QV-3162

Delivers exceptional picture quality without hardwired ethernet connections. Weatherproof cameras captures objects day/night and can be installed outside. Real time remote viewing possible via PC, Smartphone (iPhone® or Android) or tablets. Motion triggered recording and backup to a USB drive.

Wi-Fi | 1TB HDD | $799

1080p Battery Powered Wi-Fi Cameras

Completely wire free weatherproof smart camera you can place inside/outside the house/shop/office to watch live and recorded video remotely. The app cam is battery powered with advanced power-saving technology featuring up to 180 days standby time.

SINGLE PACK QV-9800 **$229**
TWIN PACK QV-9802 **$449**
QUAD PACK QV-9804 **$849**

QV-3162
QV-9804

NEW 2018 | FROM $229 | Wi-Fi | Uniden

NOW $199 SAVE $100

7" 4 CHANNEL WIRELESS DVR KIT QC-3762 **WAS $299**

Superior quality digital transmission up to 100m. Quad viewing mode. Motion detection and flexible, no fuss installation. Record & playback simultaneously. Records to SD card (Up to 128GB) available separately.

- 2-Way audio communication

$149 | NEW 2018 | Wi-Fi

1080P WI-FI IP CAMERA QC-3843

Full 1080p HD IP camera with Wi-Fi connection. Easy sound pairing setup. Free Android & iOS™ Smartphone App.

- 2-Way audio communication
- PIR motion detection & manual recording
- Internal microphone & speaker
- microSD card & smartphone recording

NOW $249 SAVE $50 | Wi-Fi

WI-FI ALARM SYSTEM WITH SMARTPHONE CONTROL LA-5610 **WAS $299**

Easy to install. Controlled via the touchscreen, wireless key fob remote or by your Smartphone. Features SMS, email or auto-dial feature. *See website for more details.*

- 100 Zones

FROM $19.95

WIRELESS NETWORKING ANTENNA

Improve the range at either your base station or terminal. Specifically designed for 2.4GHz applications and 802.11 wireless networking.

- Detachable magnetic base supplied

5DB AR-3273 **$19.95**
11DB AR-3277 **$39.95**

$29.95

USB TO RS-232 CONVERTER XC-4834

Allows a computer with a USB port to use any RS-232C serial device via the USB port. Suitable for POS systems, ISDN adaptors etc. Over 1Mbps data transfer rate.

- 1.5m long

NOW $99 SAVE $20 | DUAL BAND

AC600 OUTDOOR ROUTER
YN-8349 **WAS $119**

Provides Wi-Fi access in your outdoor entertaining area, carpark, shed etc. Dual band for speed up to 433Mbps. Functions as Wi-Fi repeater, access point, or router.

- Single PoE connection

NOW $119 SAVE $30

SERIAL TO ETHERNET CONVERTER
XC-4134 **WAS $149**

Ideal solution for people who need to monitor or access RS-232 based equipment remotely or to share them over a network.

- Converts RS-232, RS-485 and RS-422

UHF Handheld Radios:

80 Channel. Compact & lightweight. Scan, CTCSS & VOX function.
1W, 2W & 5W available in single, twin & quad packs.

GME

FROM $89.95

SINGLE

See website for details.

1W DC-9046 **$89.95**
2W DC-9048 **$109**
5W DC-9054 **$249**

DC-9046

NEW 2018

GME

FROM $145

TWIN PACKS

See website for details.

1W DC-9047 **$145**
2W DC-9049 **$209**
5W DC-9053 **$579**

DC-9049

NEW 2018

GME

$399

2W QUAD PACK DC-9050

See website for details.

NEW 2018

Panasonic

$159

CORDLESS TELEPHONE WITH MOBILE LINK & REPEATER - TWIN HANDSET YT-9010

The included repeater doubles the range, giving you more flexibility to move around your home or office. Link up to two phones via Bluetooth® and you'll be able to make or receive calls from your mobile. *See website for more details.*

FROM $79.95

UHF ANTENNAS

Robust and durable. Suitable for cars, RVs and trucks.

4DBI FLEXIBLE DC-3073 **$79.95**
5DBI FIBREGLASS DC-3078 **$99.95**
3DBI & 6DBI PREMIUM DC-3071 **$129**

$12.95

UHF ANTENNA BASE DC-3062

Constructed from UV stable polypropylene and a 5/16", 25TPI plated brass bolt.

$29.95

TELEPHONE EXTENSION RINGER
YT-6068

Loud volume helps you hear the phone when in the shed or other parts of the house.

FROM $12.95

SB-1645

CORDLESS PHONE BATTERIES

Jaycar carries a wide range of replacement batteries suitable for Panasonic®, Uniden® and others. Bring your phone or battery and we can usually match a replacement!

TECH TALK:

Extending Your Network

READ THE FULL ARTICLE:
jaycar.com.au/extendyournetwork

With so many devices today connecting to your home or office network, it is important to properly plan your network to avoid the frustration of network drop-outs or Wi-Fi dead zones. Wi-Fi routers typically have a free-to-air coverage range of 100m, this is dramatically reduced in the presence of objects and walls that absorb or hinder the Wi-Fi signal. Luckily there are many ways to improve wireless network coverage so you can reliably access your network from anywhere around the home or office. You can extend your Wi-Fi wireless network using a relatively simple wireless extender, or a more elaborate and complete mesh Wi-Fi system.

A **WI-FI EXTENDER** will connect to your router, either by picking up a weak Wi-Fi signal, or via a direct wired connection to your router, and rebroadcast its own signal. A **MESH** network consists of nodes that communicate with each other and form part of a single network. Mesh networks deliver the best performance and bandwidth to connected remote devices. Extending the wired network port directly from your router to another location is easy with an **ETHERNET-OVER-POWER (EOP)** solution. Network data, up to 1000Mbps, is modulated and carried over standard electrical wiring. This is a simple, flexible and inexpensive way to extend wired Ethernet anywhere around the home or office.

Wi-Fi Range Extenders:

NOW $49.95
SAVE $10

Wi-Fi

N300 YN-8370 **WAS $59.95**
- Repeater, access point, router
- Signal Rate:
  11n: Up to 300Mbps, 11g: Up to 54Mbps, 11b: Up to 11Mbps
- 2 x 10/100 LAN Port
- 2.4GHz
- 802.11b/g/n
- 76(H) x 53(W) x 40(D)mm

NOW $79.95
SAVE $20

DUAL BAND Wi-Fi

AC1200 DUAL BAND YN-8372 **WAS $99.95**
- Repeater, access point, router
- Signal Rate:
  11ac: Up to 867Mbps, 11n: Up to 300Mbps, 11g: Up to 54Mbps, 11b: Up to 11Mbps
- 2 x 10/100 LAN Port
- 2.4GHz & 5GHz
- 802.11ac/n/g/b
- 72(H) x 50(W) x 30(D)mm excluding antenna

$249

ASUS

DUAL BAND Wi-Fi

NEW 2018

AC1900 DUAL BAND YN-8428
- Repeater, access point, router, media bridge
- Signal Rate:
  11ac: Up to 1900Mbps, 11n: Up to 600Mbps, 11g: Up to 54Mbps, 11b: Up to 11Mbps
- 5 x 10/100/1000Mbps LAN Ports, 1 x USB3.0 Port
- 2.4GHz & 5GHz
- 802.11ac/n/g/b
- 106(W) x 106(D) x 178(H)mm

Ethernet Over Power Kits:

NOW $99
SAVE $20

500MBPS YN-8355 **WAS $119**
- Signal Rate: 500Mbps
- 1 x 10/100 LAN Port
- 240VAC
- Up to 300m mains range
- 58(W) x 73(H) x 90(D)mm

tp-link

$139

AV1000 GIGABIT YN-8442
- Signal Rate: 1000Mbps
- 1 x 10/100/1000 LAN Port
- 240VAC
- Up to 300m mains range
- 126(H) x 70(W) x 42(D)mm

Wi-Fi

NOW $119
SAVE $30

N300 WI-FI YN-8357 **WAS $149**
- Signal Rate:
  Mains: 500Mbps, 11n: Up to 300Mbps, 11g: Up to 54Mbps, 11b: Up to 11Mbps
- 1 x 10/100 LAN Port
- Up to 300m mains range
- 2.4GHz • 240VAC
- 152(H) x 80(W) x 44(D)mm

ASUS

DUAL BAND Wi-Fi

$279

NEW 2018

AC1200 WI-FI YN-8434
- Signal Rate:
  Mains: 1200Mbps, 11ac: Up to 867Mbps, 11n: Up to 300Mbps, 11g: Up to 54Mbps, 11b: Up to 11Mbps
- 3 x 10/100/1000 Ports, 1 x 10/100/1000 Port
- Up to 300m mains range
- 2.4GHz & 5GHz • 240VAC
- 152(H) x 80(W) x 44(D)mm

Wi-Fi Whole Home Systems:

Delivers fast, uninterruptible Wi-Fi to every corner of your home. Enjoy a smooth, seamless and secure connection anywhere in the house all the time!

- Repeater, access point, router
- Signal Rate:
  11ac: Up to 867Mbps, 11n: Up to 300Mbps, 11g: Up to 54Mbps, 11b: Up to 11Mbps
- 1 x 10/100/1000Mbps LAN Ports, 1 x 10/100/1000 WAN Port
- IEEE 802.11ac/n/g/b

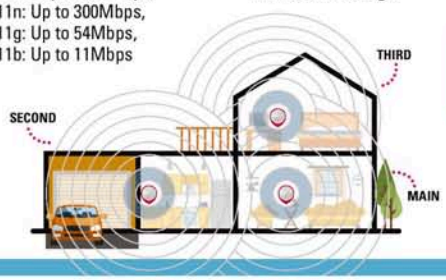

$399

DUAL BAND tp-link

AC1300 DECO MESH YN-8444
- 2.4GHz & 5GHz
- 4 x Internal antenna
- Power: USB-C (Mains adaptors included)
- 120(Dia) x 38(H)mm

$499

ASUS

NEW 2018

AC2200 LYRA MESH YN-8432
- Tri-band 2.4GHz & 5GHz-1 & 5GHz-2
- 7 x Internal antenna
- Power: 12VDC@2A Mains adaptors included)
- 150(Dia) x 50(H)mm

Workbench Essentials:

There has been an obvious resurgence in people getting back to the workbench and reviving skills involving manual dexterity. As you will see across the following pages, Jaycar has all the DIY tools you'll need to equip your workbench so you can create projects from the power of your brain and your hands.

1. NETWORK CABLE METER XC-5078 **WAS $84.95**
- Check cable integrity or measure AC & DC voltage
- 600V, 2000 count
- AC/DC voltages up to 600V
- AC/DC current up to 200mA
- Resistance measurement

2. 30 DRAWER CABINET HB-6323
- 6 rows of 5 drawers, each measuring: 50(W) x 30(H) x 115(D)mm
- Stack multiple units together for larger storage requirements

3. 80W SLIMLINE LAB POWER SUPPLY MP-3842 **WAS $149**
- Includes banana to alligator clamp leads
- Constant current and voltage options
- 0-16V/5A, 0-27V/3A, 0-36V/2.2A
- 53(W) x 300(D) x 138(H)mm

4. PCB HOLDER WITH MAGNIFIER TH-1987
- Perfect for PCB assembly & soldering
- 2X magnifying lens
- Requires 3 x AAA batteries

5. MAGNIFYING GLASS QM-3505
- 4.5" diameter viewer allows hands free operation
- Fold into a neat and easy to store package

6. 5 PORT USB DESKTOP CHARGER MP-3439 **WAS $49.95**
- Charge and power up to 5 x USB devices at the same time
- High Current 2.4A charging
- Integrated desktop stand
- 5V @ 8A (Total)

$39.95

NETWORK CABLE TESTER WITH POE FINDER XC-5084

Tests UTP/STP/Coaxial/Modular network cables by manually or automatically detecting missing or disordered wiring, and open or short circuits.
- Supplied in a plastic case and with a PoE (Power-over-Ethernet) Finder

WAS $99.95 $49.95 SAVE $50

NETWORK CABLE TRACER XC-5083

Easily trace cables even when cables are in a bundle or hidden in punchdown blocks or wall plates. Also checks telephone line polarity and status i.e ring/busy/idle.
- Single/multi tone signal

$69.95

4P/6P/8P MODULAR CRIMP TOOL WITH NETWORK/POE TESTER TH-1939

Combination crimper tool and cable tester in one unit. Tests for both UTP and STP cable.
- Single and multi-wired cable crimping
- Detachable cable tester

FROM $119 SAVE UP TO $60

SMART POWER COMPUTER BACK-UP

Initiates shutdown procedures in mains power blackouts. Ensures steady power supply during voltage drops/fluctuations.

650VA/390W MP-5205 **WAS $149 NOW $119 SAVE $30**
1500VA/900W MP-5207 **WAS $349 NOW $289 SAVE $60**

FROM $139 SAVE UP TO $100

19" RACK MOUNT ENCLOSURES

6U to 12U in Swing or Fixed frame. Ideal for IT, studios, PA, etc.

6U FLAT PACKED	HB-5170	**WAS $179 NOW $139 SAVE $40**
6U ASSEMBLED	HB-5171	**WAS $199 NOW $149 SAVE $50**
12U FLAT PACKED	HB-5174	**WAS $239 NOW $179 SAVE $60**
6U SWING FRAME	HB-5180	**WAS $269 NOW $199 SAVE $70**
12U SWING FRAME	HB-5182	**WAS $349 NOW $249 SAVE $100**

FROM $3.95

CAT6A PATCH LEADS

Upgrade your home or office network to speeds up to 10Gbps. Blue sheathed. ACMA approved.
- 0.5m to 30m available

FROM $49.95

RACK MOUNT CAT 5E/6 PATCH PANELS

24 port patch panel with a hard metal exterior. Numbered ports and a labeling area for each port.

CAT 5E YN-8046 **$49.95** **CAT 6** YN-8048 **$69.95**

$29.95

PATCH LEAD MANAGEMENT PANEL HB-5434

1U size, keeps all your patch leads under control.

NERD PERKS CLUB OFFER

FREE LCD SCREEN OPENING TOOL
(TD-2121) WITH PURCHASE OF SMARTPHONE REPAIR KIT (TD-2118).

27 PIECE SMARTPHONE REPAIR KIT TD-2118

Contains all necessary tools you need to fix your Smartphone from 4mm bits, tweezers & more. Compact storage.
- 190(L) x 130(W) x 26(D)mm

$29.95

LCD SCREEN OPENING TOOL TD-2121

Suitable for screen removal on many phones, tablets or any other smart devices.
- Spring loaded suction pliers
- Double-ended prying tool

$9.95

EXCLUSIVE CLUB OFFERS:

FOR NERD PERKS CLUB MEMBERS

WE HAVE SPECIAL OFFERS EVERY MONTH. LOOK OUT FOR THESE TICKETS IN-STORE!
NOT A MEMBER? Visit www.jaycar.com.au/nerdperks

NERD PERKS CLUB OFFER

JUST $69.95

8-CHANNEL WIRELESS LIGHT CONTROLLER FOR VEHICLES MS-6210 **REG $99.95**

SAVE $30

NERD PERKS CLUB OFFER

ALL FOR $299

RADIO & ANTENNA BUNDLE

5W UHF CB RADIO
DC-1122 **REG $249**
5DBI FIBREGLASS ANTENNA
DC-3078 **REG $99.95**

VALUED AT $348.95

SAVE $49.95

NERD PERKS CLUB OFFER

ONLY $99

BASIC CAR ALARM SYSTEM
LA-9003 **REG $129**

SAVE $30

NERD PERKS **SAVE 20%**

1700 PCE ULTIMATE RESISTOR PACK
RR-2000 **REG $32.95 CLUB $24.95**
1/4 watt 5% miniature sized carbon film.

NERD PERKS **HALF PRICE!**

11MM GLUE STICKS
TH-1996 **REG $17.95 CLUB $8.95**
For large gun. Pack of 45.

NERD PERKS **SAVE 40%**

USB PORT TO RS-485/422 CONVERTER
XC-4136 **REG $49.95 CLUB $29.95**
Automatically detects serial signal rate.

NERD PERKS **SAVE 15%**

60W CAR POWER ADAPTOR
MP-3478 **REG $39.95 CLUB $32.95**
Selectable voltage: 5, 6, 9 & 12VDC.

NERD PERKS **SAVE 25%**

25MM TITANIUM DOME TWEETER
CT-2007 **REG $19.95 CLUB $14.95**
50WRMS. 8 ohms.

NERD PERKS **HALF PRICE!**

WIRE TYPE THERMOCOUPLE
QM-1284 **REG $11.95 CLUB $5.95**
Fitted with banana plug termination.

NERD PERKS **SAVE 20%**

MAINS POWER BOARD
MS-4040 **REG $9.95 CLUB $7.95**
4 way. 2400W max load.

NERD PERKS **SAVE 40%**

ISOPROPYL ALCOHOL
NA-1067 **REG $9.95 CLUB $5.95**
Aerosol Can - 300g.

NERD PERKS **SAVE 40%**

SOLDER FLUX PEN
NS-3036 **REG $11.95 CLUB $6.95**
12ml. Dries in 5 to 10mins.

NERD PERKS **SAVE 30%**

ANL IN-LINE FUSE HOLDER
SZ-2078 **REG $14.95 CLUB $9.95**
Nickel plated, suitable for high end car audio installations.

NERD PERKS **SAVE 15%**

3-IN-1 STUD DETECTOR
QP-2288 **REG $59.95 CLUB $49.95**
Wood, metal and live wire detection. Built-in laser level.

NERD PERKS **SAVE 25%**

METAL CASE
HB-5446 **REG $19.95 CLUB $14.95**
184(D) x 70(H) x 160(W)mm.

NERD PERKS CLUB MEMBERS RECEIVE:

20% OFF
ALARM SIRENS & STROBES*

**Applies to Jaycar 620E Alarm Sensor, Sirens & Strobes*

YOUR CLUB, YOUR PERKS:
CHECK YOUR POINTS & UPDATE DETAILS ONLINE.
LOGIN & CLICK "MY ACCOUNT"
Conditions apply. See website for T&Cs

NEW 2018

What's New:

We've hand picked just some of our latest new products. Enjoy!

$14.95

USB POWERED 8W SOLDERING IRON
TS-1532

Heats up in under 15sec and cools down in under 30sec. Long-life tip with protective cap. 2- in-1 heating element and soldering tip.

- 380°C-400°C temp range

$149

12V 125A DUAL BATTERY ISOLATOR KIT MB-3681

Automatically combines two batteries when charging and isolates the two batteries when not charging.

- Fully automatic once installed
- Storage mode switch for full isolation

$399

STEM

Handheld 3D Scanner
TL-4250

Turn your physical world into digital replicas, where you can modify and reproduce them with 3D printing. Compact and light design allows you to move it around the desired target for scanning with ease.

See website for details.

$9.95

3.5MM AUX 2M EXTENSION CABLE WITH MOUNT AA-0411

- 3.5mm plug to 3.5mm socket
- Socket enclosed in mount

ALSO AVAILABLE:

3.5MM AUX & USB EXTENSION CABLE WITH MOUNT AA-0412 **$14.95**

$19.95

24HR MECHANICAL MAINS TIMER MS-6109

IP44 rated. Spring-loaded cover. Time can be switched on/off.

- 240VAC @ 10A / 2400W Max.
- 79(W) x 91(H) x 75(D)mm

QP-5521

FROM $19.95

DOT MATRIX WHITE ON BLUE LCD

Features white backlit text on a blue background for great readability.

16X2 CHARACTER QP-5521 **$19.95**
20X4 CHARACTER QP-5522 **$24.95**

$39.95

12-IN-1 SOLAR HYDRAULIC ROBOT KIT KJ-9030

Great way to learn about solar power and hydraulics. 12 different projects to build.

$29.95

12V BATTERY SOLAR TRICKLE CHARGER MB-3504

Keep your boat, car, tractor, motorcycle or any 12V house battery topped up. 1.5W.

- Cigarette lighter / battery clip option
- Dash/Windshield mount (suction cups supplied)

$69.95

3.5" HEADS UP DISPLAY WITH GPS LA-9032

Keep an eye on your speed without diverting your eyes from the road! Vehicle speed & compass. Over speed alarm. Upright & reverse display modes. Auto brightness adjustment.

- 12/24VDC operation
- 90(L) x 54(H) x 12(D)mm

$349

1000A 12/24V LITHIUM JUMP STARTER MB-3759

Lightweight and ultra-compact. 12V/24V compatible starting with automatic detection. USB charging outlet and light.

- Mains and car charger included
- 269(W) x 241(H) x 129(D)mm

TERMS AND CONDITIONS: REWARDS / NERD PERKS CARD HOLDERS FREE GIFT, % SAVING DEALS, DOUBLE POINTS & MEMBERS OFFERS requires ACTIVE Jaycar Rewards / Nerd Perks Card membership at time of purchase. Refer to website for Rewards/ Nerd Perks Card T&Cs. PAGE 3: Nerd Perks Card holders receive special price of $69.95 for IoT Wireless LED Sign Project (includes 1 x XC-3802 + 1 x XC-4622 + 1 x MP-3144 + 1 x HM-3211 + 1 x XC-3850 + 1 x ZS5807 + 1 x RR0596) when purchased as bundle. PAGE 6: Buy TD-2118 Smartphone Repair Kit & get LCD Screen Opening Tool (TD-2121) FREE! Valid with purchase of TD-2118. PAGE 7: Nerd Perks Card holders receive special price of $299 for In-Dash Radio & Antenna Bundle (includes 1 x DC-1122 + 1 x DC-3078) when purchased as bundle. Nerd Perks Card Holders gets discount price for Basic Car Alarm System (LA-9003) & 8-Channel Wireless Light Controller (MS-6210). 20% OFF Alarm Sirens & Strobe applies to Jaycar 620E Alarm Sensor, Sirens & Strobes product category.

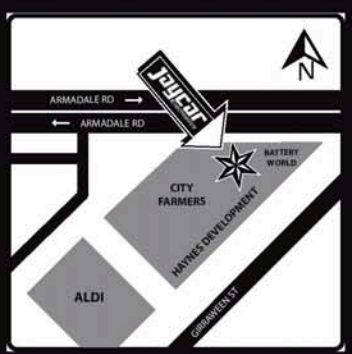

NEW STORE: ARMADALE

Shop 5/1256 Armadale Rd, WA, 6112
PH: (08) 6496 0182

FOR YOUR NEAREST STORE & OPENING HOURS:

1800 022 888
www.jaycar.com.au

97 STORES & OVER 140 STOCKISTS NATIONWIDE

Jaycar Electronics

Head Office
320 Victoria Road,
Rydalmere NSW 2116
Ph: (02) 8832 3100
Fax: (02) 8832 3169

Online Orders
www.jaycar.com.au
techstore@jaycar.com.au

Arrival dates of new products in this flyer were confirmed at the time of print but delays sometimes occur. Please ring your local store to check stock details. Occasionally there are discontinued items advertised on a special / lower price in this promotional flyer that has limited to nil stock in certain stores, including Jaycar Authorised Stockist. These stores may not have stock of these items and can not order or transfer stock. Savings off Original RRP. Prices and special offers are valid from Catalogue Sale 24 June - 23 July, 2018.

Tim Blythman takes a close look at the latest "Pi":

Raspberry Pi 3 Model B+

Arguably one of the most popular – and therefore most successful – single-board-computers in the world today, the "Pi" can be found everywhere from the experimenter's bench to revolutionary commercial products. The latest version, the 3B+, has a few niceties to make it even more capable!

The **Raspberry PI 3B+** was released on Pi Day (March 14 or 3.14, maybe it makes more sense if you write your dates backwards!).

It was six years ago that the first Raspberry Pi single-board computer (SBC) was released and in that time, there has been a variant or two released each year, with sales around 5 million units worldwide per year.

If you Google "Raspberry Pi", you'll get somewhere around 181 million hits, ably demonstrating the popularity of this device!

Moreover, if you're looking for a particular Raspberry Pi application, the chances are *very* good that someone, somewhere has done just that – or something close enough that can be adapted to suit. And because of backwards compatibility, you should have

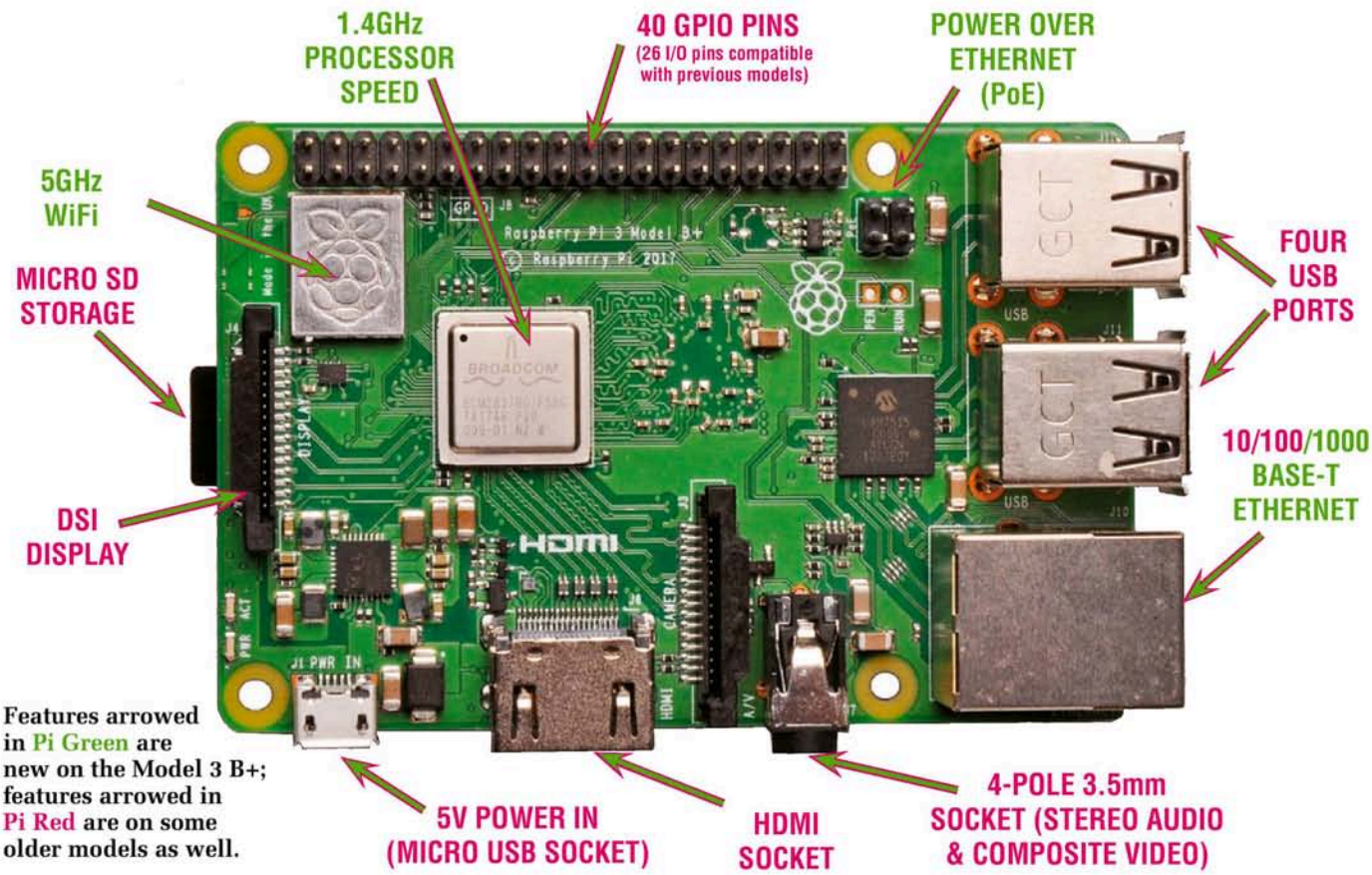

Features arrowed in Pi Green are new on the Model 3 B+; features arrowed in Pi Red are on some older models as well.

Raspberry Pi			
	Model 1B	Model 3B	Model 3B+
Release	April 2012	February 2016	March 2018
Architecture	ARMv6 32-bit	ARMv8 64-bit	ARMv8 64-bit
Processor	700MHz	1200Mhz	1400MHz
Memory	512MB	1GB	1GB
Network	10/100 Mbit	10/100 Mbit	10/100/1000MBit
GPIO pins	17	26	26
WiFi	None	802.11n 2.4GHz	802.11ac 2.4GHz/5GHz

no difficulties there.

A surprise?

The release of a model 3B+ came as a bit of a surprise, given that the rumoured Raspberry Pi Model 4 was expected to be released some time in 2019.

With the Raspberry Pi Foundation noting a shift in their efforts towards software, this will no doubt push the 'next Pi' even further into the future.

The Raspberry Pi Foundation is keeping their cards close to their chest on this one but that is to be expected, when it appears to be consistently setting the same low price point for new versions of their hardware.

On the Foundation's product page, there is also an obsolescence statement to the effect that the model 3B+ will be in production until at least January 2023.

Interestingly, there does not seem to be a similar statement on any of the other models (except the cut-down Pi Zero), so we may see the Pi 3B+ around for a while.

Educational background

In the spirit of the Acorn BBC Micro, the Raspberry Pi started out as a computer suitable for education (much of the software included on the default Raspbian operating system still has an educational intent). But it has become the inexpensive computer of choice for all manner of DIY projects, such as arcade game emulators and media players.

A (small?) step up

While the step from model 3B to 3B+ sounds more like evolution than revolution, there are certainly some interesting changes which may make the newer model much more suitable for some new projects.

Some core specs have not changed since the model 3B was released two years earlier. The new Pi still has 1GB of RAM, four USB ports, an HDMI socket and a 3.5mm TRRS socket for audio and composite video. The 40-pin GPIO header remains the same, as does the remainder of the other main board features and physical compatibility appears unchanged.

Network hardware

Two of the biggest changes are in network hardware. The Pi 3B+ now has Gigabit Ethernet (although it is limited to 300Mbps practical throughput due to USB limitations) and 5GHz WiFi. This is a great advantage for users who are using the Raspberry Pi for Internet of Things Projects, especially as there is now modular compliance certification for the WiFi, meaning it is easier to certify products created around the Pi 3B+.

The small metal can embossed with a Raspberry Pi symbol (top left) is the obvious visible change of the WiFi upgrade and the improved WiFi layout also appears to have improved the 2.4GHz range as well as adding 5GHz.

There's also a header designated for PoE (power over Ethernet) next to the GPIO header, although a separate HAT (Hardware Attached on Top) board is required to make use of the PoE function.

Coupled with the introduction of PXE network booting (and USB booting) on the Model 3B, this means the Pi 3B+ can more easily be set up to boot and operate remotely in out of reach areas remotely.

Benchmarks

The processor speed is now 1.4GHz, up from the 1.2GHz of its predecessor, with the main system-on-a-chip also sporting a metal 'heat spreader' (as described by the Raspberry Pi Foundation).

The obvious benchmarking tests and comparisons that have been run show no surprises in performance compared with the 3B, although the percentage rise in power consumption appears to be over double the performance gains. The 3B+ specifies a 2.5A power supply compared to 2A for the 3B.

Power management

An interesting addition which no doubt helps the new Pi achieve higher speeds is the dedicated power management IC. The MXL7704 was actually developed specifically for the Raspberry Pi 3B+, and controls a total of six supply rails, including one of the nominal 1.2V supplies, which is adjusted depending on processor load. There is the incoming 5V rail, two 3.3V rails, a 1.8V rail and two 1.2V rails, and the IC is controlled via I^2C.

That the Raspberry Pi Foundation can have an IC specifically developed for one of their products gives an indication of how popular the new board is expected to be.

Other SBCs

A comparison with some of the other single-board computers available is shown in the table overleaf. The influence of the Raspberry Pi range is seen in how much some of the other

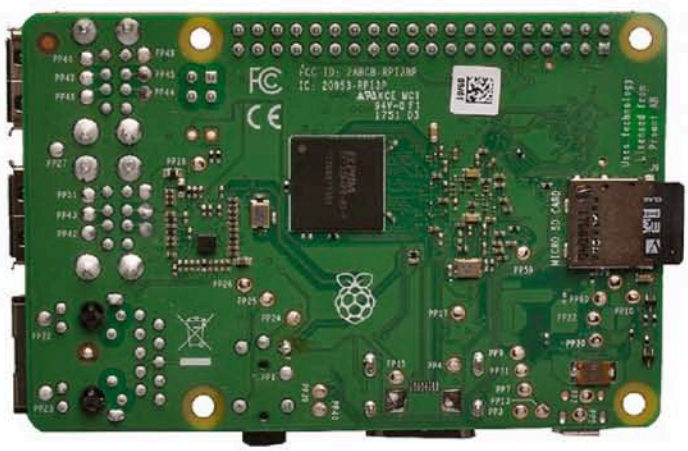

The front-side photo opposite is shown significantly over-size, for clarity. This shot, of the back of the unit, is reproduced same size (PCB is 85 x 55mm) so you can get a much better idea of the amount of power packed into the Pi.

The 40-pin GPIO header socket on the Raspberry Pi 3B+ is compatible with earlier 26-pin headers – the first 26 pins are identical, which makes any hardware you've created for earlier Pi versions work just the same as on the 3B+.

boards are attempting compatibility with things such as the Raspberry Pi dimensions and the GPIO header.

The Orange Pi PC Plus and Odroid C1+ almost appear to be drop-in substitutes dimension wise, and along with the PCDuino Nano 4, sport the same 40 pin header.

There is little doubt that these three boards are all hoping for some share of the Raspberry Pi market. Give or take missing features like WiFi or IR receiver, these three boards would no doubt do a similar job hardware wise.

The BeagleBone and Pine boards have a slightly different audience, which may or may not be suitable for specific uses. The Beaglebone Black Wireless looks to have lower specifications, but the provision of its many IO pins backed by the PRU (Programmable Realtime Unit) means it is better suited to operations that require high performance of directly connected peripherals.

The Pine A64 LTS (LTS stands for Long Term Supply, and has been promised to be available until 2022) is larger and probably has higher specifications that even the new Raspberry Pi. Nonetheless, it still calls its 40 pin header a 'PI-2' type.

While some of these boards appear to be cheaper than the Raspberry Pi, what will be missing is user support. For example, I recently tried to upgrade an older model PCDuino 3B to Ubuntu 16.04, and there was no support for this, meaning newer packages were impossible to install. It appears that linux-sunxi.org is working to maintain support for some AllWinner based boards.

Software

On the other hand, the latest build of Raspbian (the official Raspberry Pi Foundation operating system) is still claimed to be compatible with the Raspberry Pi Model 1. For new users, the ease with which a Raspberry Pi can be set up is what clearly sets it apart from other single board computers.

The large community which has grown up around the Raspberry Pi also assists all users in many ways. There is no doubt that the new Raspberry Pi 3B+ will continue to be popular for these reasons.

Summary

Features that we would see being the big selling points are the combination of PoE and network boot, allowing a Pi 3B+ to be connected, set up, powered and running off nothing more than an Ethernet cable.

The modular certification combined with 5GHz WiFi make the new model of the Pi a great candidate for incorporation and integration into consumer products.

So is it worth upgrading?

The new model is slightly more expensive than the 3B, so we'd expect that the shift to the Pi 3B+ to be steady rather than instantaneous, with some, but not all, users quick to jump on the new features. SC

Where from?

Altronics:
www.altronics.com.au/p/z6302c

Element14:
au.element14.com/2842228

More reading:

https://hackaday.com/2018/03/14/raspberry-pi-gets-faster-cpu-and-better-networking-in-the-new-model-3-b/

https://en.wikipedia.org/wiki/Raspberry_Pi

www.raspberrypi.org/products/raspberry-pi-3-model-b-plus/

www.raspberrypi.org/blog/pi-power-supply-chip/

https://medium.com/@ghalfacree/benchmarking-the-raspberry-pi-3-b-plus-44122cf3d806

COMPARISON OF RASPBERRY PI 3 B+ WITH OTHER COMMON SBCs

	Raspberry Pi Model 3B+	Orange PI PC Plus	BeagleBone Black Wireless	PCDuino 4 Nano	Pine A64 LTS	Odroid C1+
RRP (USD)	$35.00	$24.00	$70.00	$30.00	$32.00	$35.00
Architecture	ARMv8 64bit	AllWinner H3	Cortex A8	AllWinner H3	AllWinner R18	Cortex A5
Processor	1400MHz	1600Mhz	1000MHz	1200MHz	1152MHz	1500MHz
Memory	1GB	1GB	512MB	1GB	2GB	1GB
Network	10/100/1000Mbit	10/100 Mbit	None	10/100Mbit	10/100Mbit	10/100/1000Mbit
Breakout Headers	40 pin	40 pin	2 x 46 pin	40 pin	40 + 34 pin	40 pin
WiFi	802.11ac 2.4GHz/5GHz	802.11n	802.11n	None	802.11n	None
Host USB Ports	4	3	1	3	2	4
Storage	Micro SD slot	8GB eMMC onboard, Micro SD slot	4GB eMMC onboard	Micro SD slot	Optional eMMC and Micro SD slot	eMMC Socket, Micro SD slot
Other		IR Receiver	2 x PRU Peripheral microcontrollers	IR Receiver, Microphone	Battery port	IR Receiver, RTC
Main Supported OS	Raspbian, Ubuntu, Windows 10 IOT,	Android, Ubuntu, Raspbian	Debian, Android, Ubuntu	Debian, Ubuntu	Linux, Android	Ubuntu, Android
Size	85 x 56mm	85mm x 55mm	87 x 54mm	64mm x 50mm	130mm x 80mm	85 x 56mm

Raspberry Pi Tide Clock and Information Screen

Using the new RaspberryPi 3 B+ – by Tim Blythman

Over the years, we've had numerous requests for Tide Clocks. Although seemingly quite trivial, it's not an easy feat to forecast the tides (and that's all anyone can actually do). . . but here it is.

As you might guess from the title, it's not the only thing this project does.

Tide Clock

The idea of a Tide Clock may not immediately be appealing for someone who lives away from the coast, but that has not stopped us from receiving requests for such a device.

Even if you are not nautically inclined, you might use a Tide Clock to know whether it is safe to go swimming in the sea baths or exploring rock pools . . . or even if there will be any beach to lie on when you get there

The advantage of this Tide Clock over others that may have been suggested in the past is that they depend on complicated mathematical algorithms.

These only apply to specific locations (and that may, over time, become inaccurate). This one always has access to the latest tide information.

We've had suggestions for a Tide Clock to use the movement from an analog clock to show the relative phase of the tide, but we feel that this would not give as much information as we can show on the screen we are using.

You might have guessed through our use of a Raspberry Pi 3B+ that we aren't calculating the tides, but simply fetching this data from the internet, specifically, the Bureau of Meteorology website. While this almost seems like cheating, we feel that it is the only way to consistently, accurately and easily provide tide information for a wide range of locations across Australia.

We're using the Python programming language, and although you don't need any experience with Python to complete this project, having some exposure to programming (even in other languages) might help you with understanding how it all works.

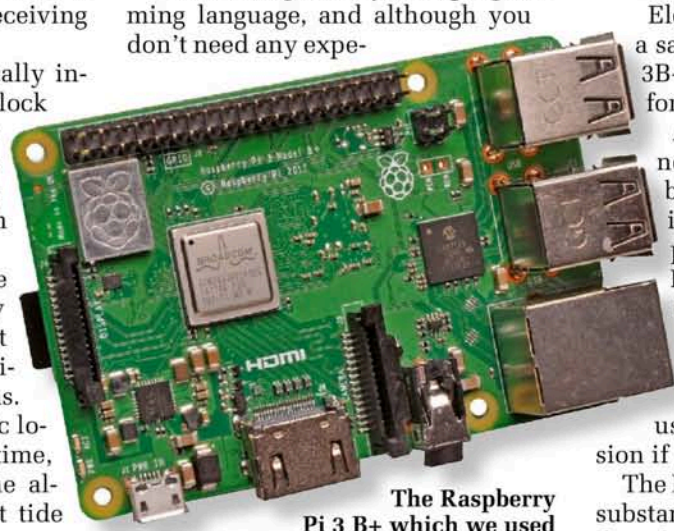

The Raspberry Pi 3 B+ which we used for this project.This project doesn't rely on any of the new features of the Pi 3, so you should also be able use the Pi 2 if you already have one.

Although it is based in Australia, www.bom.gov.au/australia/tides/ also provides tide information for many locations outside Australia, such as in Antarctica and Melanesia.

Raspberry Pi 3B+

Element14 has provided us with a sample of the new Raspberry Pi 3B+, and this is what we have used for this project.

As far as we can see, there are no specific features of the Raspberry Pi 3B+ that we are using for this project that would preclude earlier version of the Raspberry Pi being used but we have not yet tested it on any.

Given the fact that the Pi 3B+ is the latest and now most easily obtained, you might as well use it rather than an earlier version if you need to buy new.

The Raspberry Pi 3B+ does not look substantially different to the 3B, although you might notice the two shiny metal cans on the board standing out the most.

These are the more obvious upgrades – the latest version of the Pi now sports 5GHz Wifi and a 1.4GHz processor speed.

Less obvious, is that there is also a header for PoE (Power over Ethernet) on the board. This requires a separate

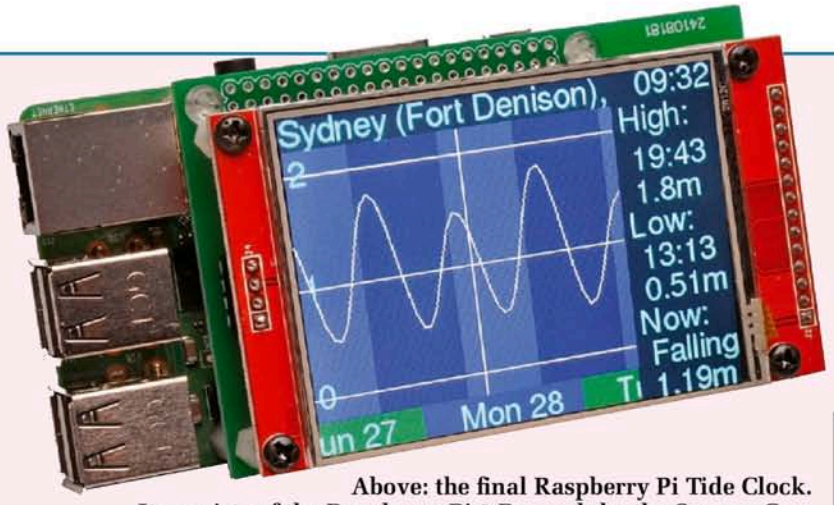

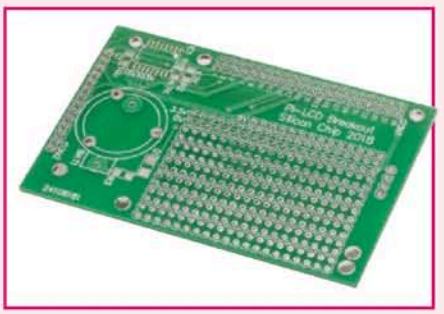

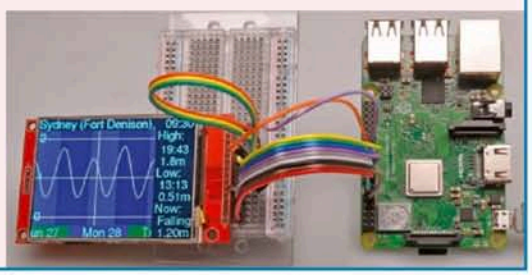

Above: the final Raspberry Pi Tide Clock. It consists of the Raspberry Pi 3 B+ module, the SILICON CHIP Raspberry Pi to LCD Breakout Board (as shown inset top right), which makes connection to the LCD very much simpler, along with the 2.8-inch TFT Touchscreen LCD module (see parts list). At lower right is our prototype, using a breadboard instead of the breakout board – obviously this involves lots of inter-connecting cables.

PoE HAT, but sounds like a useful add-on if a project requires power to be provided to it in a hard-to-reach place.

The LAN has also been updated to Gigabit Ethernet, although this is limited by the fact that it is still connected via the internal USB bus, giving a maximum throughput of 300Mbps.

Information Screen

Because a Tide Clock might be of limited interest to those living away from the coast, we have added another feature to turn this project into something even more useful.

It arises from nother request we had recently for a "readout" for the Water Tank Level Meter from the February 2018 issue. Because the ThingSpeak website also provides a portal for information to be accessed via the internet, this data can also be displayed.

So why haven't we called it a 'Water Tank Level Meter Readout'? Apart from being quite an ungainly name, the Information Screen can be easily adapted to any numeric data that can be uploaded to a ThingSpeak feed.

We recently saw that someone had adapted their hamster's exercise wheel to upload data to a ThingSpeak feed, and this is just one of the many thousand publicly accessible feeds that are out there.

How it works

As we've already mentioned, the Raspberry Pi 3B+ is displaying the data it receives from the internet. What we're using for the display is the same small, economical touchscreen LCD panel that is used in the Micromite LCD Backpack projects.

We built our prototype with jumper wires, but have also designed a breakout board to allow the Pi and display to be assembled into a compact, free-standing unit.

The Pi fetches its data by using a carefully formulated web address. A small program in the Python language decodes this data into numbers and times which it can use to create graphs and other text information which it displays on the screen.

When operating in Tide Mode, the Pi retrieves about four days of data at a time (two in advance and two in the past). When operating continually, the Pi only needs to refresh its data every day or so, as the tide data is quite minimal as only the high and low tides and times are actually recorded.

The Pi uses a sine curve approximation to interpolate the intermediate tide heights, which is about the best simple approximation that can be done without requiring more information. Of course, this is not completely accurate so we cannot advise using the Tide Clock for navigation purposes.

In fact, the BOM has a similar warning about the data which we are drawing from, but in our experience, the readings we are getting are no more than 10cm different from other sources of tide information.

The interpolated tide heights are graphed, with a vertical line in the middle of the graph indicating the current time to the nearest hour. Information about the next high tide and low tide are also extracted from the data and displayed on the screen, along with a clock based on the Pi's current

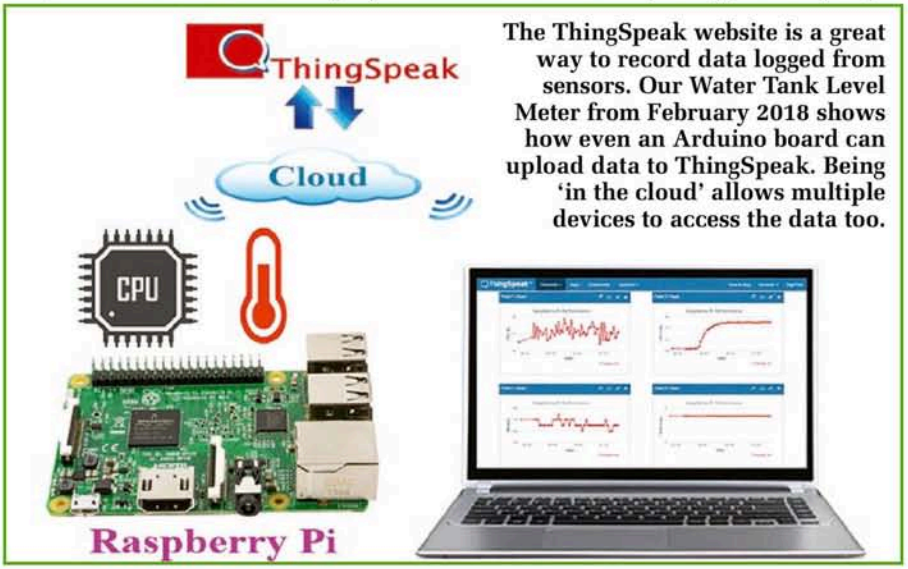

The ThingSpeak website is a great way to record data logged from sensors. Our Water Tank Level Meter from February 2018 shows how even an Arduino board can upload data to ThingSpeak. Being 'in the cloud' allows multiple devices to access the data too.

The Tide Clock display shows a lot of information. The current day, date and tide conditions for the next twenty four hours are shown, as well as next high tide, next low tide and even the time. The tide conditions at Fort Denison are close and accurate enough for our location on the Northern Beaches.

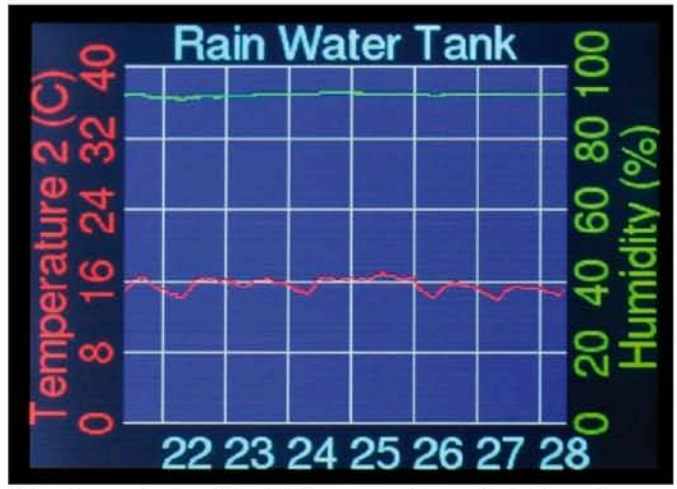

The above photo of the LCD screen shows data from the ThingSpeak channel from the February Water Tank Level Meter article. The horizontal and two vertical scales can be adjusted, as can the update frequency. The title and axis labels are drawn from information in the ThingSpeak channel.

internal time.

Due to the clock, the display is updated every minute, although you would struggle to see any change minute to minute.

The ThingSpeak interface operates in a similar fashion, downloading the data from two ThingSpeak "feeds" and then displaying it in a graph, along with a legend and axis labels on each side, and a time scale at the bottom.

What ties all these parts together is a small menu screen, which is displayed when the Pi starts up. From here, either the Tide Clock or ThingSpeak screen can be activated.

These pages are actually separate Python programs, so can be customised to suit your preferences.

For example, if you want to monitor the tide in two separate location, then two separate programs preset to those locations can be saved and loaded by the menu.

The final step in making it all work is to activate the menu program as a service under the Raspbian operating system, so that the menu starts up when the Pi is powered up. This means that the Pi can run without a monitor, keyboard or mouse.

Thus the Pi can be left as a standalone display on your desk. If you do actually use your Pi as a desktop computer (eg with a monitor, keyboard and mouse) or similar, you can still use all these functions, as the Python program simply runs in the background, and the screen runs independently of any monitor.

Display connections

The hardware construction is not particularly involved, You can either assemble the interface PCB we have designed or go for the free-wired approach with jumper leads.

Although we have included a spot for a real-time clock IC, it isn't necessary for this project, as the Pi will need internet access to fetch the data it needs, and if that is the case, it should have no trouble updating its internal clock via NTP.

If you are fitting the RTC IC, you will also need to install the 4.7kΩ resistors above the IC (near pin 1) and the capacitor below the IC as well. There are also extra steps involved in config-

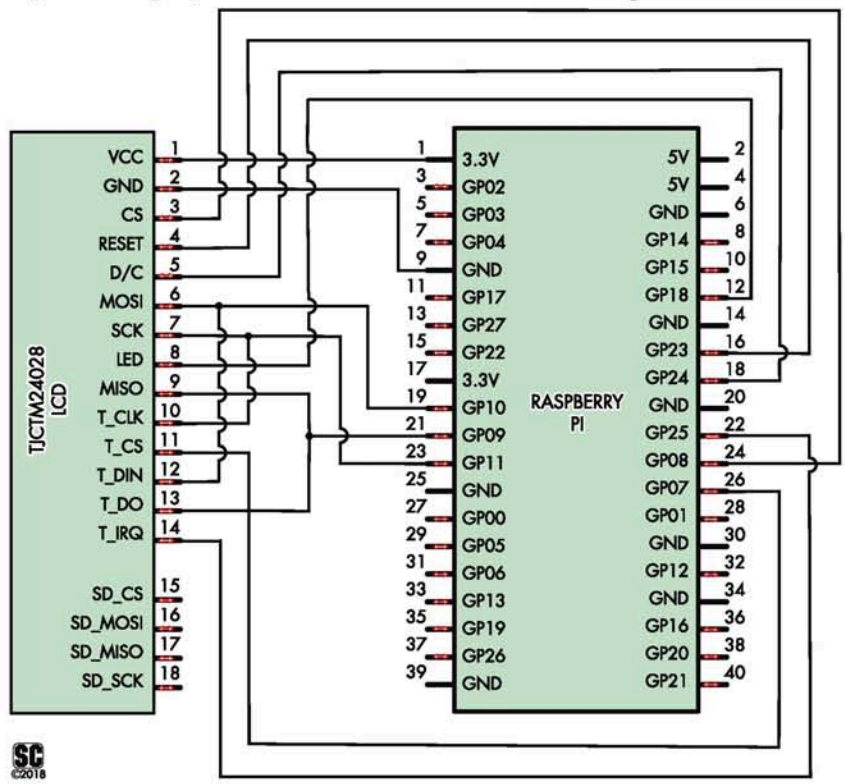

Fig.1: the wiring between the Raspberry Pi 3B+ and the LCD can easily be done with prototyping jumper leads if you like. Because some of the pins on the Raspberry Pi go to two pins on the LCD, this is much easier to do with the LCD attached to a breadboard.

uring the RTC which are beyond the scope of this article.

The minimal construction requires the 2x20 way female header to be mounted underneath the PCB, and the other two female headers to be mounted on top. Attach six of the spacers and six of the M3 x 6mm machine screws to the intermediate PCB, leaving the bottom left hole vacant. Note that some spacers go on top (to line up with the LCD) and some on the bottom (to line up with the Raspberry Pi).

Through the bottom left hole of the LCD, place an M3 x 20mm machine screw and run the seventh spacer onto this, as this hole lines up directly with that in the Raspberry Pi. Screw three more machine screws into the remaining holes in the top of the LCD.

Thread the final spacer onto the end of the M3 x 20mm machine screw on the back of the LCD, then attach the Raspberry Pi to the back of the PCB using the four remaining M3 x 6mm machine screws.

Alternatively, if you do not have the PCB, you can wire it up using Fig.1. We found it easier to plug the LCD into a breadboard because some of the wires (for the SPI signals) are routed to more than one pin on the LCD.

Software

Just like any project that runs on a computer, no matter how small, this project depends heavily on software. We aren't going to go into the detail of setting up an SD card, as you can quite easily buy a NOOBS (New Out Of the Box Software) card which greatly simplifies the process of setting the Raspbian operating system.

We'll assume you have the Pi up and running under Raspbian with a keyboard, mouse and monitor attached for test purposes, and a working internet connection via Ethernet or WiFi.

The display uses the SPI interface, so the first thing is to ensure that the SPI interface is enabled.

This can be found under the Preferences>Raspberry Pi Configuration menu option, then by clicking on the interfaces tab and ensuring that the SPI enable option is checked. Restart if necessary.

The required software doesn't need much work toinstall it. Using the File Manager, navigate to the /home/pi folder and extract the contents of the downloaded .ZIP to here.

All but one of the files needed will be in the /home/pi/infoscreen folder, the exception being the "infoscreen.service" file in the /home/pi folder.

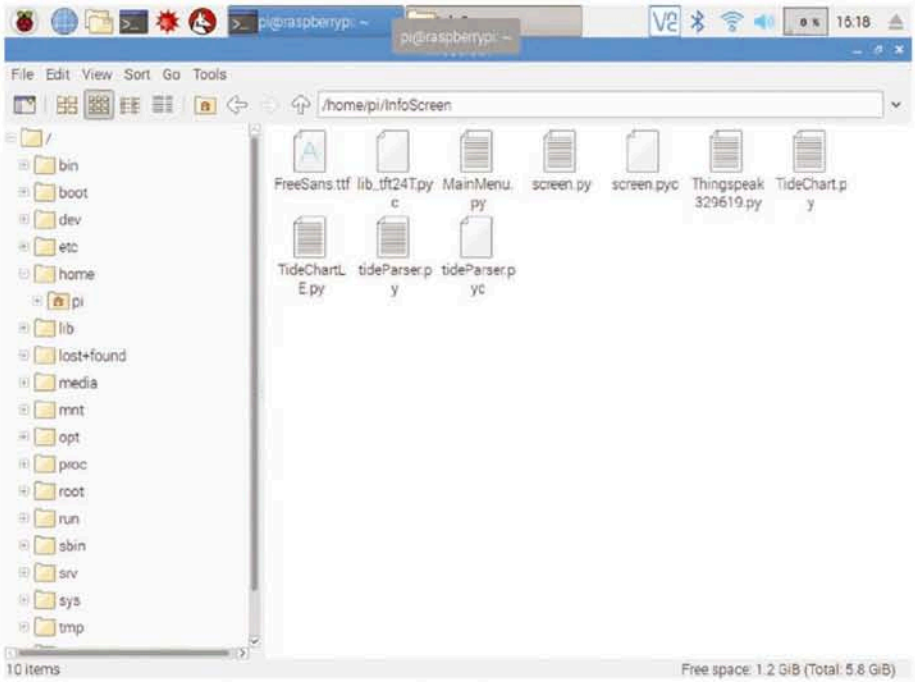

Fig.2: check that the contents of the /home/pi/InfoScreen folder looks like this after you have copied the files from the .ZIP file. There will also be an "infoscreen.service" file in the /home/pi folder.

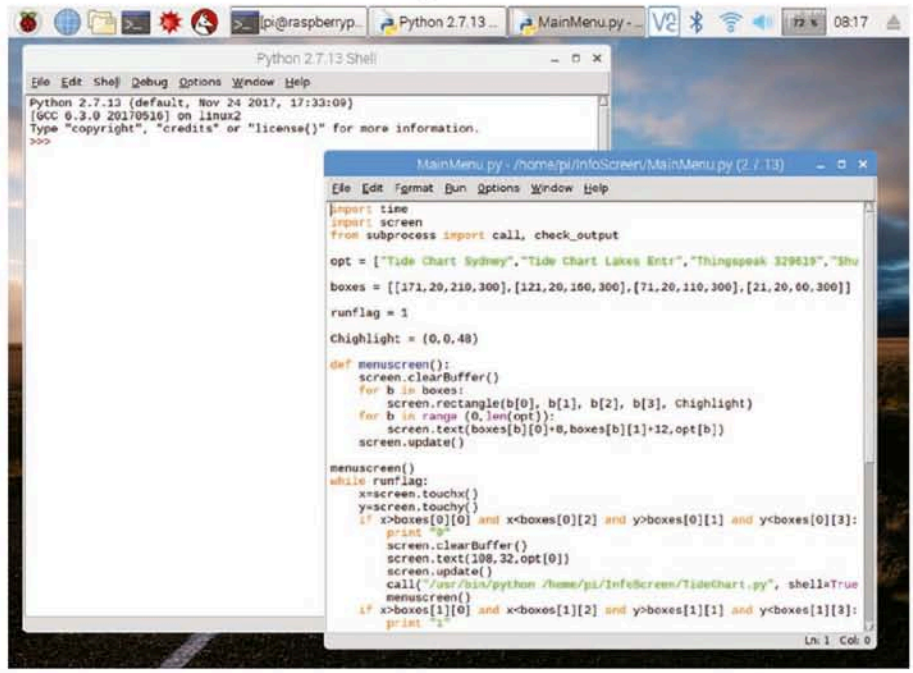

Fig.3: the Python Shell window and the MainMenu.py program laid over it. Note the version (2.17.13) which shows that we are not using the newer Python3. This is due to its incompatibility with the display library we are using.

Fig.2: InfoScreen Folder – the ZIP file also includes some library files to control the display.

These come from **https://github.com/BLavery/lib_tft24T**, and also include some great examples if you want to experiment further with the display.

There may be more files than what is shown here if we add features later.

The Python programming language is included with Raspbian, and can be found under the "Programming" menu.

Make sure to choose "Python 2 (IDLE)", as the later version is incompatible with the display library we

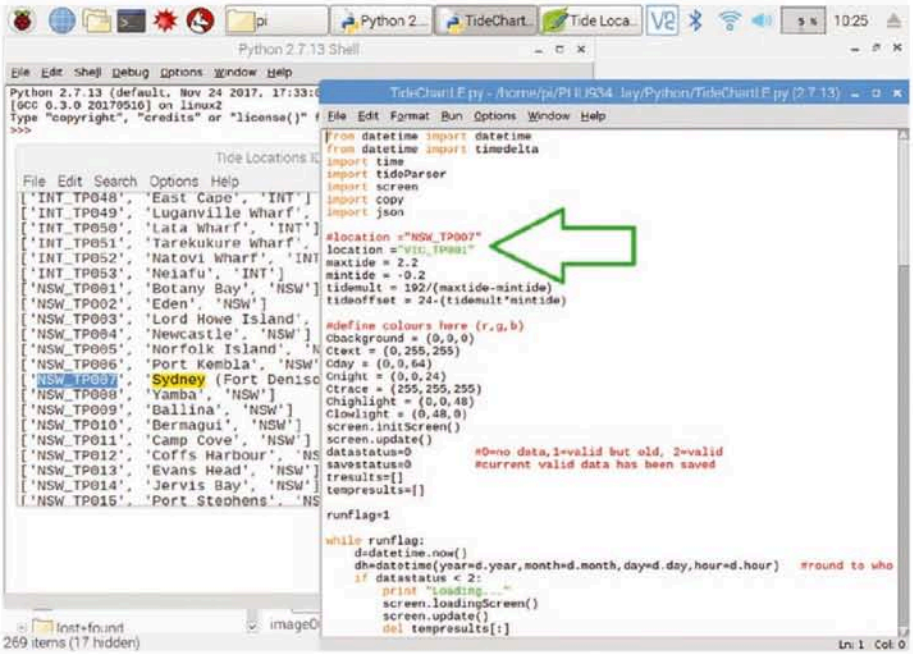

Fig.4: the Tide ID parameter should be taken from the 'Tide Locations IDs. txt' file and put into the Tide program to allow it to download the correct information. This data was collated from the page source of www.bom.gov.au/australia/tides/

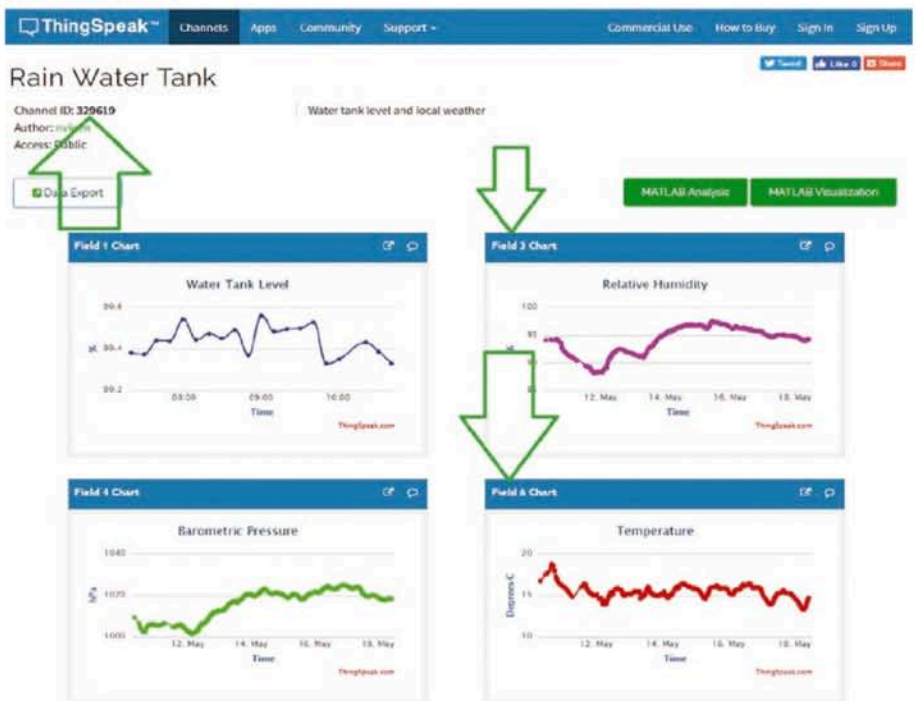

Fig.5: a screen grab of the ThingSpeak website for the Rain Water Tank project from February 2018. We've highlighted the information we need to transfer to the python program to allow it to access our data. Note that this will only work on public feeds.

are using.

Note that we've had to make some small changes to the library file to make it work with recent versions of Python (the image libraries are now imported "from PIL").

The copy in the "infoscreen" folder is modified to work "out of the box", while the zipped "lib_tft24T-master.zip" version is exactly what we have downloaded from Github.

Choose the "Open" option from the "File" menu, and navigate to the "/home/pi/InfoScreen" folder, which should be visible in the "/home/pi" folder which is displayed by default. Open the "MainMenu.py" program.

At this stage, we can run and test that the menu and other information screens will run as programmed.

Fig.3: Python Window – pressing F5 at this stage will start the MainMenu.py program, and you should see the screen initialise and display four menu items.

Try touching one of the items to check that the individual screens load properly. Tapping on the screen will cause that screen to exit and return to the menu.

You may not specifically want to use the locations we have set as default, and you are probably not interested in the Water Tank in our ThingSpeak channel. Fortunately, it is quite easy to change these to suit your preferences.

Turning the tide

The BOM tide information is available for many locations around and outside of Australia, as you can see from their website www.bom.gov.au/australia/tides/

Using the map tool, find the location nearest to you.

Note that the nearest location may not provide the exact tide conditions at your location, although we have set our location to "Sydney (Fort Denison)", we find it is very close to our conditions on the Northern Beaches about 15km away.

The BOM has given each of these locations a code which is not easy to discern from the website, and it is this code which the Raspberry Pi uses to generate a web address to download the necessary data.

To create a custom tide location, we are going to edit and make a copy of the tide program to suit.

Open the "TideChart.py" file and save it with a different name (in this case, we've used "TideChartLE.py" so we know this file points to Lakes Entrance in Victoria).

You'll see the "location" variable near the top of the file. This is what needs to be changed.

Fig.4: Tide ID – open the "Tide Location IDs.txt" file and find the name of your location in the list. Copy the location code, paste it into the new copy and save the file.

Press "F5" to run the modified file and test that it works and downloads the correct data.

The name that appears at the top of the screen is retrieved from the BOM

website, so if it is correct and the tide graph appears, everything is working as it should.

You can press Ctrl-C from the Python Shell window to stop the running program.

You can create multiple versions for different locations and give them each a different name.

If you only want to use one location and don't have a ThingSpeak channel, name the file "MainMenu.py" (overwriting the existing file), and it will be loaded at startup instead of the menu file.

If necessary, the tide minimum and maximum heights as displayed on the graph can be changed with the maxtide and mintide variables.

Displaying ThingSpeak

If you are adding a ThingSpeak feed to your Raspberry Pi Info Screen, then there are a few more steps to configure it too.

You'll need to know the ID of the channel and the numbers of the fields which you want to display. The ID is part of the URL you use to view the channel on a browser, so you might find it in the address bar too.

Fig.5: ThingSpeak fields – from the overview page of the channel (eg https://thingspeak.com/channels/329619 for our Water Tank), look for the field numbers as shown by the arrows. We call the two feeds channel "a" and "b", so we define their corresponding feeds as shown in the program.

Fig.6: ThingSpeak Program – here is where the vertical graph ranges ("amin", "amax", "bmin" and "bmax") can be set, as well as the number of vertical divisions shown ("divisions").

The "hourspan" and "hourdivision" variables also dictate how far back the graph goes in hours from the present and how this is broken up on the graph.

As for the tide program, save the changes with a different name and press "F5" to check that the program does as you expect.

Make changes by pressing Ctrl-C from the Python Shell window to stop the running program and resave if necessary. You can also exit by tapping the screen.

If all you wish to ever display is a single ThingSpeak channel, then you can do the same trick as for the tides,

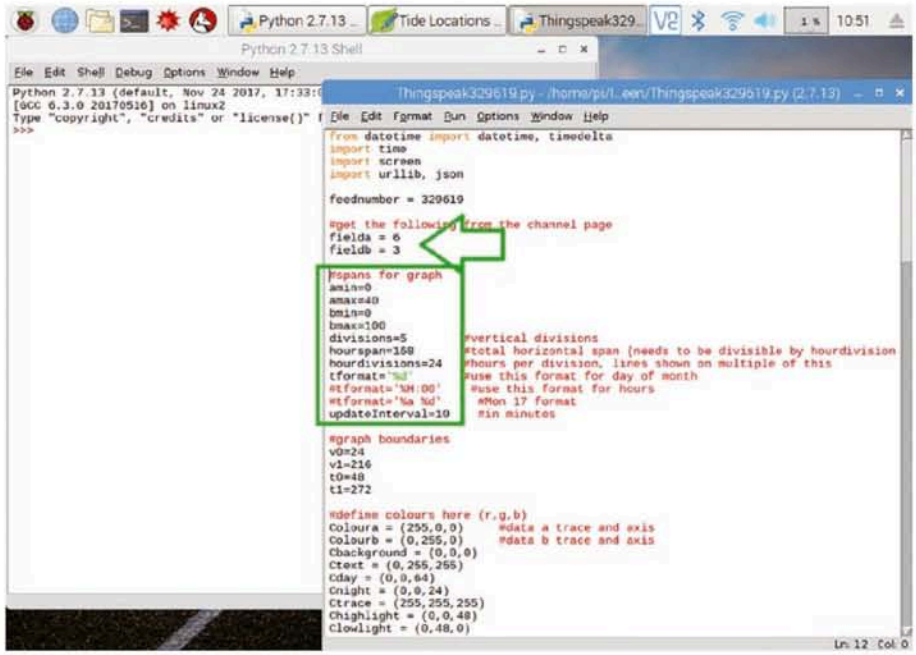

Fig.6: the highlighted items can be edited to customise this program to suit your channel and preferences.

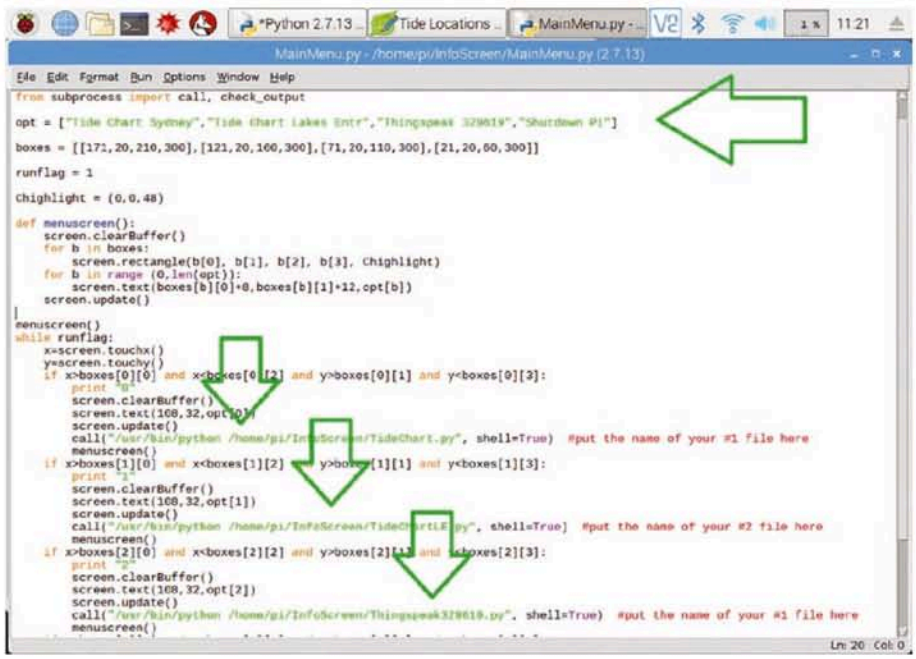

Fig.7: the MainMenu.py program simply checks touch panel and activates other programs as required. It should be edited to suit the menu choices you wish to use.

and name the program "MainMenu.py" to run by default.

Menu please

As you might expect, the Menu program also needs to be customised to suit any changes you have made to the individual displays.

If you are only running one screen, then you will have overwritten the existing "MainMenu.py" file, and don't need to do this step.

If you are running multiple screens, open the "MainMenu.py" file.

Fig.7: Menu Program – there will be two locations that need to be edited for each screen. The first is the line at the top, which contains a list of "friendly" menu names.

These should be set to something easily understandable, but not more than about twenty characters.

Note the last option is to shut down the Pi – if you do need a fourth option and have another way to cleanly per-

form a shutdown (eg attached mouse, keyboard and monitor), then this can be replaced too.

The three lower lines indicated contain the names of the programs which were saved earlier, including the full file path.

If you have only changed the name, then that is all that needs to be change, ensuring that the ".py" extension is correct.

As for the other programs, it can be tested by pressing F5. If the program you have added does not start, check that the filename is correct.

Boot setup

If everything is working so far, and you would like the display to automatically jump into the menu when the Pi starts up, then we need to make a few more changes to make that happen.

What we need to do is set up the MainMenu.py program to act as a service which runs in the background. To do this, we have created a short text file called "infoscreen.service" (in the .ZIP download) which needs to be installed and activated.

Open a terminal window (this is a black icon in the toolbar). If you have extracted the folder as described above, this file will exist in the home folder.

We need to copy it with this command:

```
sudo cp infoscreen.service
/lib/systemd/system
```

and make it executable:

```
sudo chmod 644 /lib/systemd
/system/infoscreen.service
```

The following command lets the system know that a new service has been added:

```
sudo systemctl daemon-reload
```

After which the service can be enabled (that is, set to start at boot):

```
sudo systemctl enable infoscreen.
service
```

The service can be stopped (for example if you want to manually run the programs or test some changes):

```
sudo systemctl stop infoscreen.
service
```

And then restarted:

```
sudo systemctl start infoscreen.
service
```

We've also included a "terminal commands.txt" file so that you can copy and paste the above commands directly into the terminal window.

Restart the Raspberry Pi to test that everything works as expected. You can make changes to the programs while the screen is running but they will not take effect until the next reboot.

So the start/stop method is a much quicker way of making and checking changes.

Another screen

Other tweaks that might be made are to the colour scheme- some of these are set by variables near the start of the program and some by variables in the screen.py library.

They are expressed as (R,G,B) triplets, with intensities from 0-255. For example, pure red is (255,0,0).

As you might imagine, with a connection to the internet, there is a vast amount of information that can be collated and displayed.

Another screen we are working on will download weather forecasts and display them – you might see this in a future download.

If you are a keen Python programmer (or even have some experience in other languages, particularly JavaScript, as many websites have data available in the JSON format), you could write your own programs to get data for display.

Parts List – Raspberry Pi Tide Clock

- 1 Raspberry Pi 3B+ with Raspbian installed on SD card [Element14 part number 2842228 or Altronics Z6302C]
- 1 Raspberry Pi to LCD adapter PCB [Silicon Chip Online Shop part number 24108181]
- 1 2.8-inch TFT Touchscreen LCD module with SD card socket [Silicon Chip Online Shop part number SC3410]
- 1 20 x 2 female header
- 1 14-pin female header
- 1 4-pin female header
- 8 M3 x 12mm tapped spacers
- 13 M3 x 6mm machine screws
- 1 M3 x 20mm machine screw

Further reading:

www.bom.gov.au/australia/tides/
http://nicolehorward.com/2018/04/23/project-floofball/ SC

The Total Package

Complete System Solutions for Your Wireless Design

Adding wireless connectivity to your product is exciting, and Microchip has you covered every step of the way with each piece of the design. Whether you want to add a Wi-Fi® sensor to your water tank or you just want the ease and control of connecting your product to a smartphone via Bluetooth®, we have the complete solution for your design. With a broad wireless portfolio, the industry's largest microcontroller selection, and software stacks with built-in security that enable cloud connectivity, Microchip is a one-stop-shop for a complete wireless solution.

To speed up development, we offer multiple reference designs and design ideas to start building from. These reference designs are great tools for showing you the right components to start with and real-life use cases for further inspiration and ease of design. And with our free software available on MPLAB® Harmony and Atmel Studio, development has never been easier.

Contact Information
Microchip Technology Australia
Email: aust_nz.inquiry@microchip.com
Phone: +61 (2) 9868-6733

www.microchip.com/wireless

microchip DIRECT
www.microchipdirect.com

MICROCHIP

The Microchip name and logo, the Microchip logo and MPLAB are registered trademarks of Microchip Technology Incorporated in the U.S.A. and other countries. All other trademarks are the property of their registered owners. © 2018 Microchip Technology Inc. All rights reserved.

Recurring Event Reminder

REMINDER PERIOD
6, 8, 12 or 24hrs, every week or fortnight

LED REMINDER
flashes once every 2s, typically for 18hrs or until reset

AUDIBLE REMINDER
One 10ms chirp per second while the LED is flashing

POWER SUPPLY
3V lithium button cell

QUIESCENT CURRENT
19µA at 3V, 5.4µA at 2V

CURRENT WHEN LED IS FLASHING
42µA or 300µA together with piezo siren

EXPECTED CELL LIFE
1-2 years

By John Clarke

Crook memory? Forgot to feed and water the chooks every day? This simple circuit will remind you to perform any regular task, which needs to be done every few hours, days, weeks or fortnights. It reminds you by flashing a LED, and you can even connect a piezo siren for a more insistent reminder.

Let's face it, anyone can forget to do important tasks which occur at regular intervals. Some examples include taking out the garbage bins, taking medication, feeding your pets (and the chooks!) or other similar daily routines.

It's especially suitable for older people who are prone to forget to check things. For example, it could be used to remind them that their pension payments have arrived in their account. Whoopee!

Yes, we know that you can set reminders on a smartphone but that's just too much of a hassle for a lot of people. And if it happens to be an event that involves a member of the family, having a centralised method of reminding everyone can streamline the process.

This is a simple, low-cost unit which provides a single reminder that can be configured in a variety of ways. If you need multiple reminders, you could build more than one unit – it's certainly cheap enough.

Or you could consider our slightly fancier (but specialised) Garbage & Recycling Reminder project from the January 2013 issue (siliconchip.com.au/Article/1315).

For daily events, the Event Reminder has the option of either one, two, three or four regular alerts throughout the day. In other words, it can provide a reminder every 24, 12, 8 or 6 hours.

In weekly or fortnightly mode, it goes off once a week or once a fortnight. When the LED flashes to indicate the event, you can reset it by pressing a switch, but make sure you have fed the chooks! (We're very chook-minded in the SILICON CHIP office – we like fresh eggs). Having been reset, the Event Reminder will then wait for the set time period before alerting you again.

Powered by a 3V button cell, the Event Reminder is easy to set up and we are presenting it as a bare printed circuit board (PCB) to minimise cost. Of course, you can put it in a case if you want to.

Circuit description

As shown in Fig.1, the circuit is built around an 8-pin PIC12F617 microcontroller, IC1. It uses its internal 4MHz oscillator to generate the instruction clock but there is also a 32768Hz watch crystal (X1) connected between pins 2 & 3, to run a secondary oscillator for its internal Timer 1 counter. This is used to keep track of the passage of time for the reminders.

The two 100pF capacitors at pins 2 & 3 are required to make the circuit resonant, so it can be driven by the oscillator amplifier within IC1. The crystal provides good accuracy, to within a few minutes per year.

The 3V supply is marginal for lighting a LED, especially given that the cell voltage can drop to around 2V at the end of its life. To solve that problem, the components connected between pins 6 and 7 provide a boosted supply voltage for driving LED1.

In effect, we have diode pump: with pin 7 low and pin 6 high, the 100µF capacitor charges up to around 2.3V via diode D2.

Then when the micro drives pin 7 high and pin 6 low, this 2.3V is added to the 3V at pin 7 to give 5.3V for driving the LED. The drive current passes

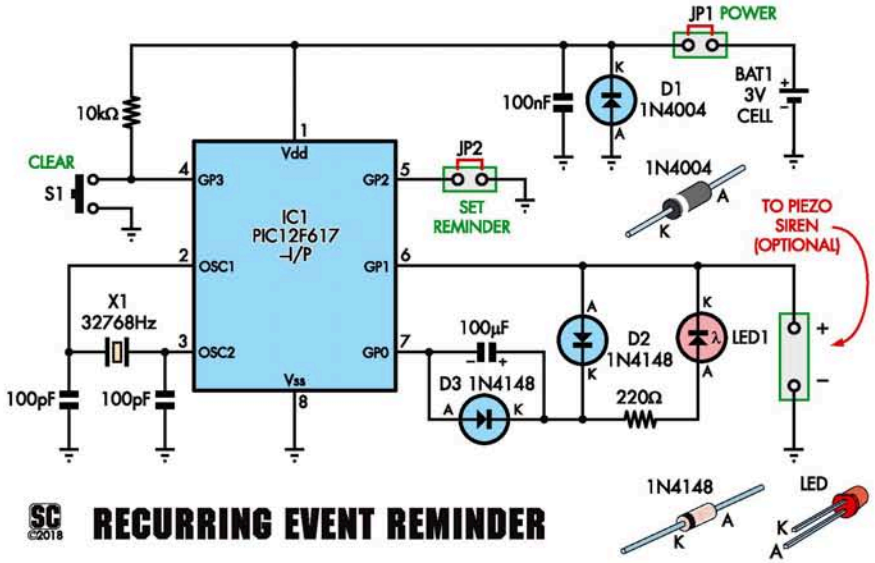

Fig.1: complete circuit diagram for the Recurring Event Reminder. The components at pin 6 & 7 boost the 3V supply to drive the LED.

through a 220Ω current-limiting resistor and LED1, back to pin 6.

Diode D3 prevents the 100µF capacitor from being reverse charged at the end of this process.

The optional piezo siren is connected between pin 6 and ground, so that when pin 6 goes high to charge the 100µF capacitor, it also powers the piezo siren, generating a brief but loud chirp.

We've elected to use a pulsating tone piezo siren, which generates its own short bursts of sound since it makes our circuit simpler.

Because this type of siren does not make any sound for about half a second after power is applied, after which it emits a short burst, we keep pin 6 high for around one second, to ensure the siren sounds, even though the 100µF capacitor charges in a much shorter time.

The unit is powered by a 3V lithium cell in a holder, labelled BAT1. Jumper JP1 is used as a power switch while diode D1 provides reverse polarity protection.

If the cell is inserted incorrectly, the diode will conduct and restrict the supply voltage for IC1 to around -0.6V. The cell holder we use does not connect to the cell if it is inserted the wrong way, so this is a "belts and braces" measure.

Maximising battery life

Most of the time, IC1 is in sleep mode, with the program halted and the internal 4MHz oscillator stopped but the 32768MHz oscillator running.

It is "woken up" once per second, to update its internal time and date and to flash the reminder LED if necessary. Sleep mode reduces the power consumption of IC1 to a very low level (around 7µA), to maximise the life of the cell.

Switch S1 has a 10kΩ pull-up resistor that holds input pin 4 (GP3) high unless S1 is pressed. When it is pressed and pin 4 goes low, IC1 is woken from sleep to respond. S1 is used to either clear the LED flashing indication (with a short press) or reset the timer if the switch is held closed for an extended period.

Note that if the optional piezo siren is used, cell life will be slightly worse. Typically, you will not leave the piezo beeping for a long time; you would reset the reminder by pressing S1. Once the piezo stops, it will no longer be an additional drain on the cell.

Jumper JP2 is used to select weekly, fortnightly or daily reminders. When power is first applied to the circuit, the GP2 input (pin 5) is set as an input with a pull-up current applied.

If JP2 is not shorted then this input will be pulled high and the software produces weekly or fortnightly reminders. If JP2 is bridged, the GP2 input will be held low and daily reminders are produced (see panel).

The internal pull-up current is switched off shortly after initial power-up and the GP2 input is then set as a low output to reduce the supply current and extend cell life. The selection between weekly/fortnightly or the various different daily reminder periods is made by a different method, as described below.

Assembling the board

The Event Reminder is built on a PCB coded 19107181 and measuring 62.5 x 38.5mm. It is presented as a bare PCB that can sit flat, be hung or otherwise attached to a cupboard or refrigerator, or mounted in a case.

If mounting in a case, before assembling the board, you can use the PCB as a template to mark out the loca-

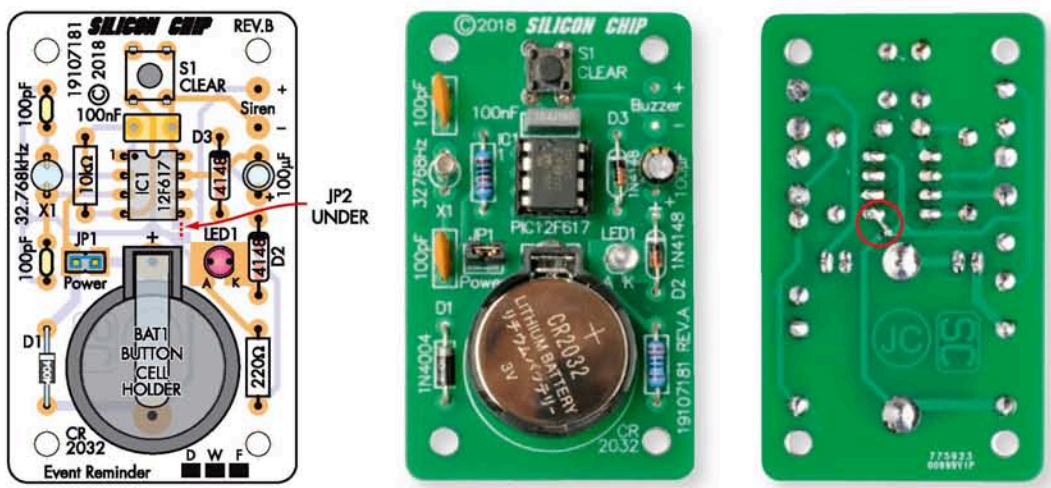

Fig.2: overlay diagram for the Event Reminder with the completed PCB shown. Note the orientation of the battery holder and the location of JP2 marked in red. A wire link has been used to bridge JP2 on the prototype PCB. The production board has a pair of closely-spaced pads in the same location which can be easily bridged with solder.

How to set the Recurring Event Timer

First of all, you need to decide which event reminder you want. The choices are once fortnightly, weekly, daily, or every twelve hours, eight hours or six hours each day. Changing to a different timer is simply a matter of following the instructions for that timer – otherwise, it will stay as set until changed.

Setting and resetting the timers is achieved by shorting either or both JP1 and JP2, in conjunction with reset switch S1.

All setting data is stored in flash memory so unless you want to change the mode, you will not have to reset it when you go to use it. However, the unit's time counter is reset to zero at power up (JP1 shorted). When powered up (JP1 inserted) and S1 isn't pressed, LED1 will flash the current setting (eg, once for weekly; twice for fortnightly).

Weekly reminder (exactly 7 days)

This is the first default mode, **without** JP2 shorted. When powered up (jumper on JP1) LED1 will flash once. LED1 will then flash exactly 7 days later from this time (to the minute!) and remain flashing for 18 hours, until reset with a short press of S1.

Fortnightly reminder (exactly 14 days)

Without JP2 shorted, remove the shorting block from JP1, press and hold S1 while replacing the shorting block on JP1. LED1 will flash twice and you can release S1. It will start flashing exactly 14 days later and is cancelled by pressing S1 (or waiting 18 hours!). Repeating this method will reset the Event Reminder to a weekly reminder.

Daily reminder (24 hours)

With JP2 shorted, the unit is in default daily mode. Exactly 24 hours after turning on, LED1 will flash for 18 hours, if it is not cancelled first (by pressing S1). It then repeats this process every 24 hours.

Two times/day (12 hours)

With JP2 shorted, remove JP1. Hold down S1, replace JP1 and wait for LED1 to flash twice. Exactly 12 hours later LED1 will flash for 8 hours, if it is not cancelled by pressing S1. It repeats this process every 12 hours.

Three times/day reminder (8 hours)

With JP2 shorted, remove JP1. Hold down S1, replace JP1 and wait for LED1 to flash thrice. Exactly 8 hours later LED1 will flash for 6 hours, if it is not cancelled by pressing S1. It repeats the process every 8 hours.

Four times/day reminder (6 hours)

With JP2 shorted, remove JP1. Hold down S1, replace JP1 and wait for LED1 to flash four times. Exactly 6 hours later LED1 will flash for 4 hours, if it is not cancelled by pressing S1. It repeats the process every 6 hours. Repeating this method will reset it back to a daily reminder.

Set timer back to zero

Press and hold S1 for 5 seconds until LED1 starts continuously flashing. This will trigger the alarm and reset the time counter to zero. Future reminders will then be related to this time. Be careful not to short any of the connections on the underside of the board with your finger.

tions to drill the four corner mounting holes in the lid, along with holes for S1 and LED1.

Use the PCB overlay diagram, in Fig.2, to assemble the board. Begin by installing the resistors. Use a multimeter to check the value of each before inserting into the PCB.

For a reminder period of 24 hours or less, the two pads on the underside of the PCB labelled JP2 need to be bridged with solder or with a short length of tinned wire. This can be a lead off-cut from one of the resistors.

Diodes D1 to D3 can be installed next, taking care to orient them correctly and noting that D1 is the 1N4004 and the remaining diodes are 1N4148s. Then fit pushbutton S1, crystal X1 and the socket for IC1. Ensure that the notched end of the socket is oriented as shown in Fig.2.

Take care when soldering the crystal as the leads are very fine and it can be damaged by excessive heating. Then mount the 100nF and 100pF capacitors which are not polarised.

Follow with the 100µF electrolytic capacitor, ensuring that its positive (longer) lead goes through the pad marked + on the PCB. The striped side of the can indicates the negative lead.

Where do you get those HARD-TO-GET PARTS?

Where possible, the Silicon Chip On-Line Shop stocks hard-to-get project parts, along with PCBs, programmed micros, panels and all the other bits and pieces to enable you to complete your Silicon Chip project.

SILICON CHIP ON-LINE SHOP

www.siliconchip.com.au/shop

The two-way pin header for JP1 can then be installed. Follow by fitting PC stakes at the wiring points for the piezo siren, if you plan to use one. Next, mount the cell holder, making sure its positive terminal (the release lever) is facing towards IC1.

If you are planning to mount the unit in a UB3 Jiffy box, use a tactile pushbutton switch with a long shaft for S1 so that it will protrude through the lid.

The board can be mounted on the underside of the lid, using four 12mm tapped spacers and eight short machine screws.

LED1 should be soldered to the PCB with its lens around 10mm above the top surface, although you could mount it higher if you wanted to. The longer anode lead must be soldered to the pad marked "A".

Programming the micro

Check your construction before in-

Parts List – Recurring Event Reminder

1 double-sided PCB coded 19107181, 38.5 x 62.5mm
1 PCB-mount vertical tactile pushbutton switch with 6mm actuator (S1) ♦ [Jaycar SP0603, Altronics S1421]
1 20mm button cell holder (BAT1) [Jaycar PH9238, Altronics S5056]
1 CR2032 lithium cell (BAT1) [Jaycar SB2944, Altronics S4999B]
1 8-pin DIL IC socket (for IC1)
1 32768Hz watch crystal (X1) [Altronics V1902]
1 2-pin header with 2.54mm spacing (JP1)
1 jumper shunt (JP1) [Jaycar HM3240, Altronics P5450]

Extra parts for piezo siren
1 1-13V pulsating tone piezo siren [Jaycar AB3456, Altronics S6117]
2 PC stakes (for wiring up piezo siren)
1 UB3 plastic Jiffy box, 83 x 54 x 30mm [Jaycar HB6024, Altronics H0153]

Extra parts for mounting in case
1 UB3 plastic Jiffy box, 83 x 54 x 30mm
4 12mm M3 tapped Nylon spacers
8 M3 x 6mm machine screws

Semiconductors
1 PIC12F617-I/P microcontroller programmed with 1910718A.hex (IC1)
1 1N4004 1A diode (D1) [Jaycar ZR1004, Altronics Z0109]
2 1N4148 diodes (D2,D3) [Jaycar ZR1100, Altronics Z0101]
1 3mm red high brightness LED (LED1)

Capacitors
1 100µF 16V PC electrolytic [Jaycar RE6130, Altronics R5123]
1 100nF 50/63/100V MKT polyester or multi-layer ceramic [Jaycar RM7125, Altronics R3025B]
2 100pF C0G/NP0 ceramic [Jaycar RC5324, Altronics R2822]

Resistors (0.25W, 1%)	**4-digit colour code**	**5-digit colour code**
1 10kΩ	*brown black orange brown*	*brown black black red brown*
1 220Ω	*red red brown brown*	*red red black black brown*

♦ use a longer actuator version (eg, Altronics S1119) when mounting in a UB3 case

serting the programmed microcontroller (IC1) in its socket. Its pin 1 dot needs to be located near the notch in the socket.

If you intend to program the PIC yourself, the HEX file (1910718A.hex) can be downloaded from the Silicon Chip website (free for subscribers).

Since we are using pin 4 of IC1 as an input for sensing the state of switch S1, its $\overline{\text{MCLR}}$ function is disabled. Also, we are running the chip off its internal oscillator. Some programmers do not support programming a chip in this configuration.

If you're using a PICkit 3 and MPLAB IDE/IPE to program this chip, it will produce a warning but you can ignore that warning and continue to program the chip.

With IC1 in place, fit the CR2032 cell in its holder and place a shorting block on the header marked JP1. If all is well, LED1 will momentarily flash after about one second to acknowledge that the circuit is operating.

Finishing it up

The final Recurring Event Reminder PCB design includes three white boxes at the bottom that are labelled "D", "W" and "F". These are intended to indicate whether your unit is set up for Daily, Weekly or Fortnightly reminders respectively. You can fill in the appropriate box with a marker pen.

If using the piezo siren, connect its black wire to the "Buzzer -" connection on the PCB and the yellow intermittent wire (for the Jaycar unit) or red wire (for the Altronics unit) to the "Buzzer +" terminal on the PCB.

The piezo siren will not chirp on the initial power-up indications of the LED; it only sounds during reminder alerts. If mounting it in a separate box, you can solder its wires to a two-core extension cable to connect to the Event Reminder PCB (as pictured above).

The yellow (+) and black (-) wires of the Jaycar piezo siren output a pulsed tone, or you can connect the red and black wires for a continuous tone.

For our prototype, we mounted the piezo siren in a separate UB3 Jiffy box, poking out through a 25mm hole drilled in the base. You could mount the main board on the lid of the same box, or mount them separately and run a cable between the two.

Really though, there's nothing stopping you from using the unit as a bare board. This also makes it easy to change the cell, although you shouldn't need to do that very often.

For example, you could affix the board to the side of a refrigerator using Blu-Tack or a similar putty-like substance at each corner.

Or you could use double-sided, foam-cored tape. Just make sure that if there is exposed metal on the fridge (eg, if it's made of stainless steel) that the solder joints on the underside of the board won't be shorted out.

You could also glue magnets onto the underside of the PCB and use those to hold it on the fridge. Alternatively, hang the PCB vertically on a picture frame hook, nail or screw attached to a wall.

The important point is that it should be mounted somewhere that you and your family members will regularly spend time (eg, the kitchen) so that someone will notice the flashing LED and/or noise from the siren.

PCB and PIC bundle

To make life really easy for you, we have a special "bundle" price of just $15.00 for both the PCB and micro, plus postage.

If you just want the board, or the PIC these are available separately from the Silicon Chip Online Store. SC

Finishing our all-new 800W plus . . .

Part 3:
by Duraid Madina
and Tim Blythman

Uninterruptible Power Supply

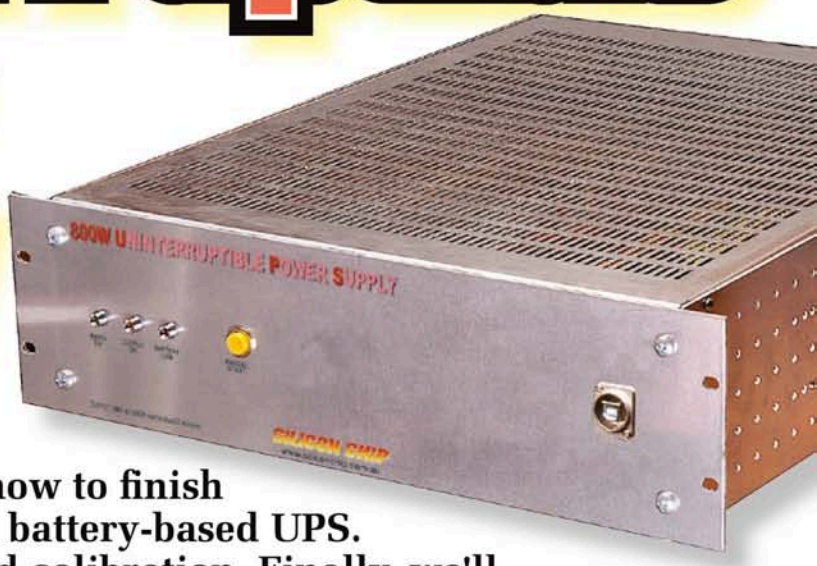

In this third article, we describe how to finish building the rechargeable lithium battery-based UPS. We'll also cover testing, set-up and calibration. Finally, we'll discuss how to connect it to a PC so that you can monitor its status and so that it will shut down automatically before the battery goes flat.

This UPS is cheaper, smaller and lighter than pretty much any equivalent commercial UPS – at least, none that we could find.

But it has another big advantage over commercial units: it can be tailored to suit your particular needs.

That includes:

- the possibility of increasing the runtime by using more or larger batteries
- reducing the cost by using cheaper batteries
- or increasing the output power through higher battery current capacity and/or a more powerful inverter.

Also, since it is based on a pure sinewave inverter, its output waveform is very clean (cleaner than mains when running from the inverter!) while many commercial UPSes produce an ugly, "modified" sinewave (really just a two-step square wave).

Since this unit is controlled by an Arduino microcontroller, you can tweak the code to suit your particular needs or you can just use the software as is, since the default settings will suit most users.

Our first article in this series (May 2018 issue), described how the UPS works and detailed the design process.

The second article (June) gave the majority of the construction details, including most of the wiring.

Now we need to program the Arduino board with the control software, test all of its functions and calibrate it for accurate operation.

Before that, however, we'll add a surface-mount USB socket to the front panel and later, we'll explain how to connect it to a computer's USB port and establish communications using freely available computer software.

This will allow the UPS to be monitored either locally or remotely via the internet, and allows the computer to be cleanly shut down in the event of an extended power failure.

Finally, we'll go into more details over the expansion possibilities mentioned above.

Finishing construction

If you followed the instructions last month, you now have a UPS which is mechanically and electrically complete but has no software to control it. So now let's get it up and running.

The front panel label

First things first: you will note in the photo above that the UPS front panel is labelled (we like to make our projects look professional!).

However, the UPS doesn't really *need* a front panel, except perhaps to show what the three LEDs indicate and the purpose of the push button.

Some constructors may leave the front panel blank and simply print a reminder on the rear panel with a fine marker pen, ie:

Green LED: Mains On
Yellow LED: Output On
Red LED: Battery Low
Push Button: Manual Start.

But if you *do* want to make a front panel label, you will need to download the panel artwork from the SILICON CHIP website and print it onto clear adhesive film.

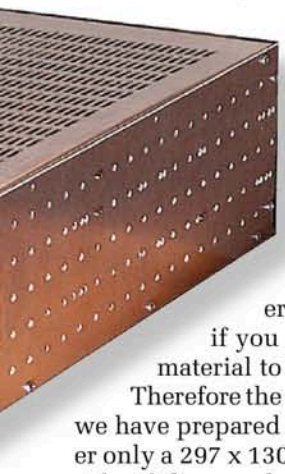

However, it is almost impossible to produce a label to cover the whole panel, which is standard rack-mount size (19 inches or ~485mm) wide.

Not even an A3 label (420mm wide) would cover this expanse . . . if you could even get the material to make one.

Therefore the front panel artwork we have prepared is designed to cover only a 297 x 130mm area of the left side of the panel – easily accommodated on an A4 sheet.

You can get clear, self-adhesive A4 sheets from a variety of sources (including ebay) suitable for use with inkjet printers.

You would print the artwork onto these labels and then attach them to the front panel.

If you can't easily get adhesive clear labels, you could mirror the images and print them onto clear film, then stick the printed side of that film to the front panel of the unit using a thin smear of clear neutral-cure silicone sealant.

Incidentally, if you do use the SILICON CHIP panel artwork, the positioning of the LEDs and switch is much more crucial, simply to get the labelling to line up.

Use the front panel artwork below as a template (remember the panel below is printed at 50% – if you're photocopying to use as a template, you need to enlarge it by 200%.)

This artwork can also be downloaded from **siliconchip.com.au**

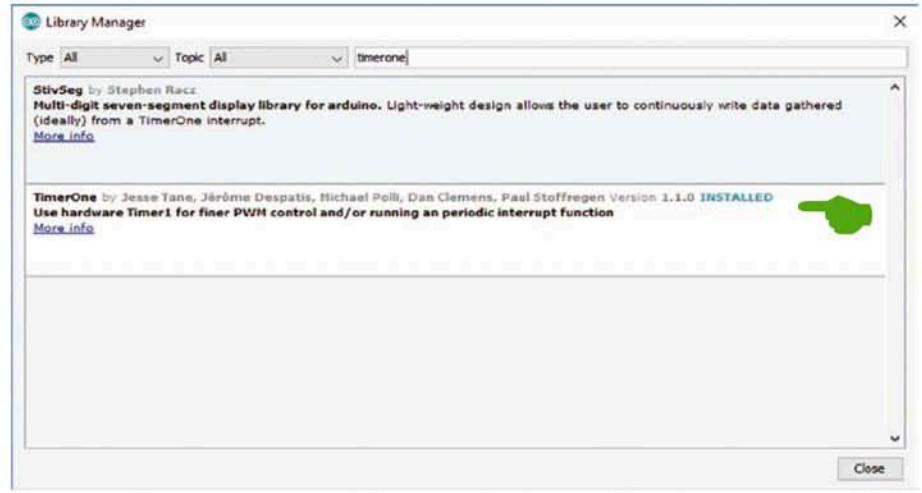

Fig.6: installing the TimerOne library can be done via the Library Manager. Click on the option highlighted above (ignore the greyed section) and click "install" when it appears.

Loading the software

You will need the Arduino UPS firmware package, which can be downloaded from the SILICON CHIP website (free for subscribers).

To compile and upload the test and control software, you need to have the Arduino IDE (Integrated Development Environment) installed. This can be downloaded from **www.arduino.cc/en/main/software**, with versions available for Windows, macOS and Linux.

Download and install a version to suit your operating system and start it up. If you already have the IDE installed, the minimum version required for the following steps is v1.6.4 so upgrade it first if you have an earlier version.

The software needs one library installed, to allow it to perform regular sampling of the mains waveform. Open the Library Manager by going to

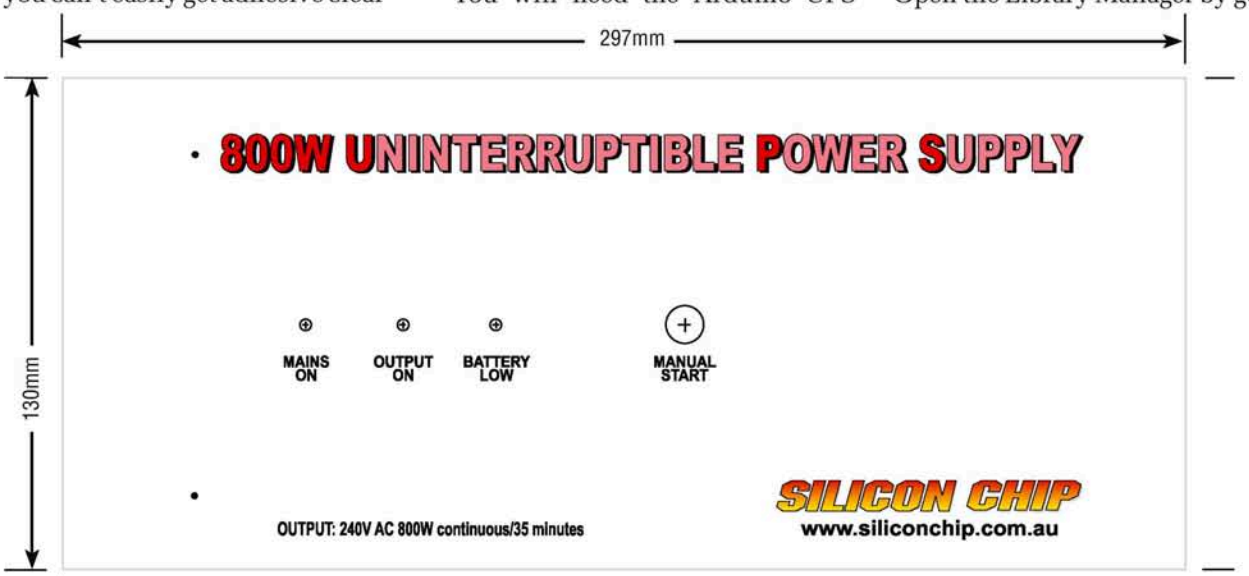

Fig.7: front panel artwork, reproduced 50% (ie, needs to be enlarged 200% if you wish to use this to make a front panel and/or to use as a template for the LEDs and Manual Start switch). This is designed to fit on a standard A4 sheet of clear, self-adhesive film. It covers less than half the width of the rack-mount panel.

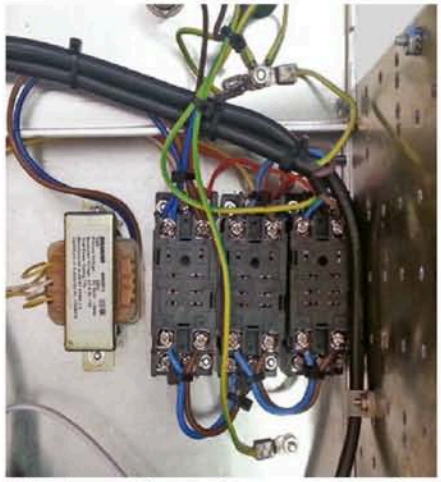

The three relay sockets are oriented so the vertical pins (the coil connections) are towards the rear panel and the horizontal pins (the relay contacts) towards the front.

the Sketch → Include Library → Manage Libraries... menu, type "timerone" in the search box and click on the "install" button that appears.

Alternatively, we supply the library in a ZIP package when you download the sketch.

You can install this using the Sketch → Include Library → Add .ZIP Library menu option.

Because this project involves high voltages and you will want to make sure that everything is working properly before "letting it loose", we have created a separate test program that can be uploaded to the Arduino.

There's also another separate "sketch" which is used for calibration and setup.

The download package includes three separate sketches, called "Silicon_Chip_UPS_Control_V3" (the control software), "Silicon_Chip_UPS_Testing" (for testing only) and "Silicon_Chip_UPS_Calibration" (for setup and calibration). The differences are explained below.

Initial checks

Plug relays RLY1-RLY3 into the bases now. It's very important that the relays are the right way around since if you manage to accidentally install the bases backwards, all the wiring will be wrong.

So make sure that the pins for the relay coils go towards the rear of the case.

Note that the connection pins for the coil are orientated differently to the other six contacts – they're 90° rotated compared to the switching contacts. Compare your bases to the photo at left.

Once the relays are plugged in, you should be able to see the armature and contacts inside the relay and these should be on the side towards the front of the unit.

Now we check that there are no short circuits between the mains and low voltage wiring or between the mains conductors.

Set your DMM to its highest ohms range (usually megohms) and connect the probes between the earthed chassis and the 0V terminal on the control shield.

The reading should be well over 1MΩ. If it's below 1MΩ then you will need to check your wiring carefully for mistakes.

Next, check the resistance between the Active pin of the incoming mains plug and chassis earth, and repeat the test for the Neutral pin. Both readings should also be above 1MΩ. Perform the same test with one of the GPOs, making sure that its associated switch is on.

Similarly, measure the resistance between the earthed chassis and the positive battery terminal. This should also be high.

Finally, the resistance between any of the earthed chassis pieces and the mains plug earth pin should be low – 1Ω or less.

Shield testing

The testing sketch displays information on the voltages being monitored and the operation of the inverter.

Remove RLY1-RLY3 from their sockets; they are not needed at this stage.

Make sure that the mains input cable is unplugged and ensure that the inverter control cable is connected. For the initial setup, leave the RST DIS. jumper (JP1) off the control shield.

Plug the Arduino into your computer's USB socket and make sure the correct COM port is selected under the Tools → Port menu.

Then open the Silicon_Chip_UPS_Testing sketch, upload it to the Arduino (Sketch → Upload) and check the messages at the bottom of the window to ensure it was successful. Then open the serial monitor (Tools → Serial Monitor) and set the baud rate to 115,200.

Every five seconds, the test sketch reads the analog inputs and displays their raw values, as well as toggling the inverter on and off.

You should see something similar to the following on the serial monitor:

```
Inverter turn off:OK
Battery Sense:484
Mains Sense:479
VIN Sense:79
Mains RMS: 3
Mains P-P: 7
Inverter turn on:OK
Battery Sense:484
Mains Sense:479
VIN Sense:79
Mains RMS: 2
Mains P-P: 6
...
```

If the inverter is connected, it will produce a brief chirp every five seconds as the Arduino turns it on and off, with corresponding feedback on the serial monitor showing that it is reading the inverter state successfully.

The "sense" values are in ADC units, so will be in the range of 0-1023. The battery and mains values should be close to 500 and VIN around 80. The battery value will reflect the state of battery charge, with a full battery being around 540 (29V) and a flat battery being about 409 (22V).

Now measure the actual battery voltage and write down this voltage reading along with the current Battery Sense value. These numbers will be required later, for calibration.

The Mains Sense value is around 500 because, in the absence of mains, the biasing resistors bring the AC waveform near the centre of the Arduino's ADC range.

Plugging in the mains should cause this reading to vary between about 300 and 700 and the RMS and P-P should increase to around 85 and 240 respectively.

The VIN Sense reading should also rise to around 200 as the Arduino is now being powered by the mains transformer.

Measure the voltage between VIN and GND on the Arduino shield and note this down, along with the VIN Sense reading displayed, again for use later during calibration.

Now (carefully!) measure the mains RMS voltage using a DMM set on a high AC volts range and write this value down, along with the RMS and P-P values displayed simultaneously in the serial console.

Unplug the unit from the mains now. If your unit is not behaving as described above, go back and check the wiring and shield construction.

In particular, high or low values for

any of the analog voltages are signs that the wrong resistors were used in the voltage dividers. Values close to zero or 1023 might indicate an open or short circuit on the shield.

Calibrating the unit

The control program relies on a number of EEPROM calibration values for correct operation. The calibration sketch allows you to set these via the USB/serial port, using a menu system.

If you don't set these, the first time you run the control program, it will load a default set of values (as determined using our prototype).

But component variation means that these are unlikely to be exactly right for your UPS, so it's better to use the calibration sketch first. These are separate sketches because the USB/serial interface is used to feed status information to the computer when running the control program.

So open and upload the "Silicon_Chip_UPS_Calibration" sketch to the Arduino, using the same procedure as described above and again, open the Serial Monitor and check that the baud rate is 115,200.

Press "d" and Enter, followed by "p" and Enter. This will load the defaults and then display them. You can also press "?" and then enter to get the following help text:

```
UPS SETUP
? This Help
~ Toggle voltage status output on/off
A-O Enter parameter, followed by number and enter
s Save current to EEPROM
l Load from EEPROM
d Load from defaults
p Print current parameters
```

The default values should be shown as follows after pressing "P":

```
Current Values:
A:VIN_SCALE   :0.0538560
B:BATTERY_SCALE   :0.0538560
C:MAINS_SCALE   :2.7090001
D:BATTERY_CRITICAL :23.0000000
E:BATTERY_MIN   :25.0000000
F:BATTERY_OK   :27.0000000
G:VIN_MIN   :11.0000000
H:VIN_OK   :11.5000000
I:MAINS_MIN   :200.0000000
J:MAINS_DB   :20.0000000
K:MAINS_MAX   :260.0000000
L:MAINS_DELAY :10000.0000000
M:VIN_DELAY   :5000.0000000
N:BATTERY_CRITICAL_DELAY: 5000.0000000
O:VIN_CRITICAL   :10.5000000
```

Now calculate the correct VIN_SCALE value for your unit by dividing the VIN that you noted earlier by the VIN Sense reading.

You should get a value similar to that shown above. Type "A" into the serial console (it must be a capital), followed by Enter, then type in the new VIN_SCALE value and press enter.

Different batteries and other options . . .

While the UPS is very capable as presented, some readers might want to change the design to reduce the cost, provide a higher battery capacity, a higher maximum output power or faster battery recharging.

The IFM12-230E2 $LiFePO_4$ batteries used in this project are rated at 23Ah each. You could use IFR12-400-Y batteries instead, which have a rating of 40Ah. These are larger and heavier and would not fit in the specified case but they would almost double the runtime.

Note that you would need to ensure that the cable between the batteries and those from the batteries to inverter are sufficiently thick. Also, recharging would take twice as long unless you also upgraded to a charger with a higher current rating.

Depending on your planned use of the UPS, a longer charge time might be acceptable, if you just want to cover occasional outages.

On the other hand, if you plan to use the unit mainly for off-line power or are in a location with frequent and long outages, a more powerful charger would be a preferable. Keep in mind that you may also need heavier cables between the charger and the batteries.

If you end up with a battery bank powerful enough to deliver more than 50A, you could then consider using an inverter with a higher power output than 1200W (up to a maximum of around 2400W/10A).

The good news is that if you decide to make these changes, the relays, Arduino, control shield and other interface modules do not need to be changed. If you use a different battery chemistry, you will need to adjust the Arduino configuration to suit the different voltage thresholds but that's it.

Reducing cost or increasing run time

As we said right at the start of the first article, this UPS is not cheap to build and that's mainly due to the lithium-based rechargeable batteries.

As explained in that article, $LiFePO_4$ batteries have significant advantages over lead-acid batteries but they are still considerably more expensive.

If you're willing to accept the disadvantages of lead-acid chemistry, such as larger size, greater and weight and reduced lifespan with multiple deep discharges, you can certainly save some money.

For example, you could substitute two Jaycar Cat SB1699 38Ah deep cycle SLA batteries, which would give you a slightly higher capacity (albeit more sensitive to discharge rate) and would make the total cost for the UPS project to around $800-900. That's a lot cheaper than a commercial UPS with equivalent performance would cost. The weight penalty would be around 10kg and you would need a larger case.

Or you could go all out and use two 150Ah Deep Cycle AGM batteries (Jaycar Cat SB1684). This would give you a massive 3600Wh total capacity, allowing you to draw 1200W for three hours or around 720W for about five hours.

The total cost would be similar to our original design, although it would weigh nearly 100kg and would be about the size of a small fridge!

Such a system would make a great power plant for a caravan, mobile home or even a shed where you don't have access to mains power. In this case, you would probably want to use a 24V MPPT solar charger or even a generator to keep the batteries topped up. Mind you, its weight of 100kg must be considered if you have a mobile home or need to tow a caravan.

Many solar regulators can simply be connected directly to the batteries and they will quite happily work with other charging sources connected at the same time but you should check the specifications of the charger before hooking it up. And if you're using lithium-based batteries, you absolutely must ensure that the charger is designed to handle that particular chemistry.

The Arduino control board in our project doesn't care how the battery is charged, as long as it occurs somehow. Charging the batteries by wind power is possible too but again this will depend on the capabilities of the wind turbine regulator.

Repeat the procedure for the battery voltage divided by the Battery Sense reading (option "B").

This should also be around 0.05-0.06, and the mains voltage divided by the Mains RMS reading (option "C"), which is normally around 2.7 but may vary depending on the exact turns ratio of your transformer.

The other values should not need to be changed but you may wish to alter them later to tweak the unit's behaviour, once it's up and running.

Press "s" and Enter to save the new settings to EEPROM.

You can check that the values were properly saved to EEPROM by resetting the Arduino and then using the "p" command to display the stored values.

Loading the control software

Do a final check over the unit's wiring to make sure that everything is as it should be, then open and upload the sketch named "Silicon_Chip_UPS_Control_V3" (if there's a newer version, it may be V4, V5 etc).

As soon as it's loaded, the piezo should sound for two seconds as the UPS attempts to start up but it cannot because the relays are not yet in place.

You can now access the APC-compatible status interface by opening the Serial Monitor and setting the baud rate to 2400.

Press "a" and you should get the "capability string", which looks like:

```
3.!$%+*.#BGKLMNQSUVYZaf
```

You might also get an asterisk ("*") on a line by itself. This means that the Arduino has detected a loss of power and is shutting down. This indicates that the software is working as designed, given that the hardware is not yet complete. Disconnect the USB cable for the next few tests.

Testing the software

Ensuring that the mains lead is disconnected, plug RLY1 and RLY2 into their sockets (the two left-most relays, looking from the front). Set S1 to the off position, plug in mains and switch it on. The Arduino should power up, detect there is no 12V supply from the PSU and then shut down.

If the yellow light comes on at all (except very briefly before the green light), the UPS is probably not sensing mains voltage correctly, as it is trying to switch over to the inverter. You should be able to measure 12.6VAC across the mains transformer input to the shield (CON1). If the UPS appears to be doing something unexpected, turn everything off and check the wiring thoroughly.

If all these tests went well, switch off the mains, switch S1 on and then turn mains back on. The UPS should perform a normal startup, with a single beep from the inverter and the green light on the front panel will turn on. You should have mains power available at the four-way GPO. The red light on the front may be flashing if the battery is not fully charged.

If all is well, you can leave it powered up for some time to charge the batteries. If the incoming mains is switched off, the yellow inverter light should come on briefly before it all shuts down (as the inverter relay is still missing). You may also see the UPS spontaneously shut down if it detects any mains glitches.

Testing the inverter

Unplug the mains and remove RLY1 (at left), then plug RLY3 (right-most) into its socket. Check that the internal mains plug is in one of the inverter's output sockets and then switch S1 back off. The following procedure tests the inverter so you do not need to connect the unit to mains.

Now press and hold down the button on the front of the UPS (S2). After about a second, the yellow light will come on and the green light should be flashing, indicating mains is not present. The red light will probably be flashing too unless the batteries are fully charged. When the button is released, the inverter should beep (indicating a successful shut-down), and all lights should go out.

Now switch S1 back on and hold in pushbutton S2 for about five seconds before releasing it. The UPS should now stay on, running in inverter mode as above, until S1 is switched off, which should cause a total shut-down

If all these tests were successful, RLY1 can be plugged back into its socket. Plug the mains plug into a socket and switch S1 back on.

Calculating the voltage scaling factors

In this article, we describe how to calculate the required scaling factors by measuring the voltages that are being sensed by the Arduino and then dividing them by the integral number being simultaneously produced by its analog-to-digital converter (ADC).

But you could calculate these values from the component values used in the circuit.

For the battery sense voltage applied to analog input A2 and the VIN sense applied to analog input A3, this is quite easy. In both cases, the divider resistor values are 100kΩ and 10kΩ and we can compute the division ratio as 11 (100kΩ ÷ 10kΩ + 1).

Since the ADC has a 10-bit resolution, the values will range from zero to 1023 (2^{10} - 1) for signals from 0V to 5V.

Therefore, each ADC step represents 4.888mV (5V ÷ 1023) and by multiplying this by our ratio of 11, to compensate for the voltage reduction due to the resistors, we get a figure of 0.05376V per ADC step, very close to the default scaling factor used.

The calculations for the mains sense voltage are more difficult because this involves three resistors – a 75kΩ resistor between the transformer and analog input A1, plus two 10kΩ resistors which go from A1 to ground and the +5V rail.

The easiest way to understand the effect of this configuration is to analyse its DC and AC conditions separately.

The transformer has a low DC resistance to ground, so the 75kΩ resistor is effectively connected to ground at one end and therefore is in parallel with one of the 10kΩ resistors, giving an equivalent resistance of 8.8kΩ.

In combination with the 10kΩ resistor to +5V, this gives a DC level of 2.35V.

For the AC analysis, since both 10kΩ resistors connect to DC rails, we can treat them as if they are in parallel, ie, equivalent to a single 5kΩ resistor. In combination with the 75kΩ resistor, this gives us a division ratio of 16 (75kΩ ÷ 5kΩ + 1).

Thus, we expect a quiescent ADC reading at A1 close to 480 (1023 x 2.35V ÷ 5V).

Assuming there is 6.3VAC across the transformer winding for a 230VAC input, that gives a step-down ratio of 36.5 times (230 ÷ 6.3). Multiplying this by the resistor divider ratio of 16 gives a total reduction of 584 times. So we can calculate the scaling factor as 2.85 (584 x 5V / 1023).

In practice, the output voltage of a lightly loaded transformer is higher than nominal, hence the step-down ratio is lower and so our real scaling factor is 2.7.

The UPS should now be operating normally, so once you switch the mains supply on, it should start up. A glitch in the mains can be simulated by turning the incoming mains off and on quickly. You should see the UPS transition to the inverter, wait for about ten seconds, then switch back over to mains power after detecting that it has been stable for a while.

At any time, you can use S1 to turn off the UPS. The Arduino should recognise that it is not getting any 12V supply, and will shut itself and the inverter down. To switch it back on, toggle S1 again and switch the incoming power off and on (or press the reset button on the Arduino).

S1 will also work to shut down the UPS if it is running from its battery. In this case, it can be restarted by toggling S1 back on and holding pushbutton S2 in for about five seconds. This takes a while as the inverter takes several seconds to reach a normal output voltage and then the 12V DC switchmode supply output will come up.

Load testing

Once the batteries have been fully charged, you may wish to do a load and runtime test, to ensure the battery capacity is as expected and that you get enough warning before it shuts down entirely.

A simple plug-in type power meter like Jaycar's MS6115 or Altronics P8137 should be used to confirm and monitor the power usage of your test load. We used an incandescent lamp and a heat gun to provide a constant load totalling close to 800W. It's also a good idea to connect a DMM across the battery terminals with clip leads so you can monitor their voltage during the load test.

Note that you can't easily clip onto the battery 0V terminal since it is insulated. The tab of REG1 on the control shield is a convenient 0V reference point.

Switch on your load(s), check that the power consumption is about what you expected, then switch off the mains input to the UPS and note the time. If the power meter has a cumulative power option, now is a good time to reset it to zero.

You might notice that the load indicated on the power meter changes slightly when mains is switched off, since the specified inverter produces 240VAC, while mains can vary from below 230VAC to above 250VAC.

The red LED should start flashing after a few minutes as the battery starts to discharge. The flashing frequency will increase over time and eventually, the red LED will be on continuously. This means that shut-down is imminent. Once the unit switches off, you will probably notice the battery voltage rebounds since the load has been removed.

When the shut-down occurs, check that the inverter shuts down as expected and note the time elapsed and cumulative energy consumed. If you have used the specified parts, the time elapsed should be close to that specified in the first article in this series, taking into account any differences between your load power and the nearest specification.

Having completed the load test, plug the UPS back in to allow the batteries to fully recharge. This will take a few hours. Ideally, you should leave it to charge overnight.

If you notice any problems with the final battery voltage or inverter shutdown, it may help to adjust the calibration values, as described later in this article. If you run into any problems, you may also find it helps to enable debug mode in the control sketch. Note that this disables the PC interface (APC protocol) but you can re-enable it later.

To do this, change line 20 of the sketch from:

```
//#define DEBUG
to read:
#define DEBUG
```

and upload the modified sketch.

After uploading this, you will probably also want to put a jumper shunt on JP1 on the control shield ("RST DIS.") so that plugging the Arduino into your PC will not reboot it and reset the UPS.

You'll need to have either mains or inverter power available so that the Arduino doesn't try to shut down immediately. Type "?" and press Enter in the serial monitor to see the list of available debugging commands. Type "~" and press Enter to toggle voltage information display on and off. Note that this mode uses a baud rate of 115,200.

The UPS is now complete and working as designed. You can put the lid on and use it as-is, or you can follow the instructions below to add a USB port so that its status can be monitored from your computer.

Adding a USB interface

Computer software can be set up to communicate with the UPS and this can run "scripts" on certain events so you can, for example, shut the computer down gracefully before the UPS shuts down due to a low battery voltage (during an extended blackout).

The software has other options like email notifications but we won't cover the steps required to set that up in this article.

For these features to work, you need a Type B USB socket on the outside of the UPS case to connect it to your computer. Unfortunately, most chassis-mount USB sockets are Type A, or they require an accurate rectangular cut-out. So we came up with the idea of mounting a Type A to Type B chassis adaptor backwards so that the Type B socket is on the outside.

Then you just need two standard Type A to Type B cables; one goes on the inside of the case and connects

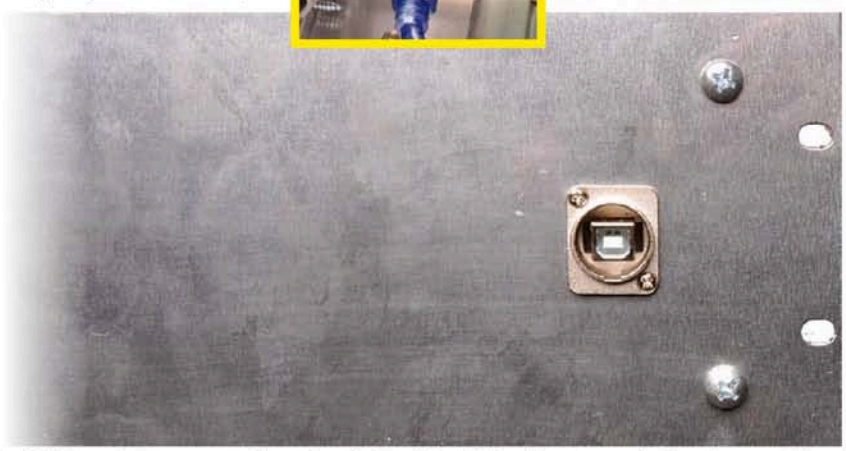

The USB socket, mounted on the right side of the front panel. Precise position is not important. Inset above is the same socket seen from inside the UPS.

from the socket to the Arduino board, while the other plugs into the Type B socket on the outside of the case and goes into the Type A socket on your computer.

The part we decided to use is Altronics Cat P0835. The drilling template is shown in Fig.8. Drill a pilot hole in all three locations, then use larger or stepped drill bits, or in the case of the largest hole a tapered reamer, to expand them to the required sizes.

The Altronics part is reversible, so if it looks like it would be facing the wrong way around when installed, undo the small screws and reverse the insert in the housing, then reattach the screws.

Mount it in place from the outside using M3 x 10mm machine screws, M3 nuts and M3 shakeproof washers, then run a USB A-B cable from the socket inside the case to the Arduino. We chose to mount it at the front to keep the cable run short, although a longer cable will be fine as long as the total run does not exceed the USB standard of three metres.

Secure the cable with cable ties, and bundle up any excess to keep everything tidy, adding extra cable clamps if necessary.

If you enabled the debugging feature of the Arduino control sketch, you will need to disable it and re-upload the sketch before proceeding. Regardless, insert a jumper shunt on JP1 on the control board ("RST DIS.").

Installing the software

The open-source "apcupsd" software is available for Windows (XP onwards), macOS, Linux and more. We tested it on Windows 10 but setting it up and running it on the other operating systems should be similar.

The APC UPS protocol operates over a serial port at 2400 baud with 8 bits and no parity.

In our case, the serial port is emulated by the USB device using the CDC protocol. Generally, the UPS host software issues single byte commands, to which the UPS replies with a brief multi-byte response.

The UPS may also spontaneously generate a status signal (such as "power fail" or "battery low") for conditions that the host computer should know about immediately.

The APC protocol has been chosen because it is the most widely supported and is straightforward to emulate.

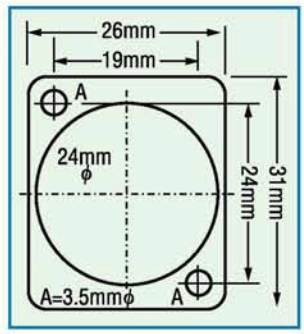

Fig.8: the front panel cutout for the USB socket is a standard "D" series pattern. This diagram is at 1:1 scale.

We recommend running the computer from a separate power source (ie, not through the UPS) during the initial testing stages.

The software can be downloaded from www.apcupsd.org Download and install a version to suit your operating system. We tested using version 3.14.14.

Select all the possible options during installation and select the option to edit the configuration file as suggested. If you need to find the file manually, it was installed on our system at C:\apcupsd\etc\apcupsd\apcupsd.conf

It can be opened with a text editor such as notepad. You will need to set the following parameters:

```
UPSCABLE smart
UPSTYPE apcsmart
DEVICE COM5
```

Note that the DEVICE parameter needs to match the COM port which is assigned to the UPS on your computer and it will be in a different format on other operating systems. This port number will be the same as the one you selected for uploading the sketch in the Arduino IDE.

Save those changes to the configuration file. If you want more details on the contents of this file, the software manual is very detailed and can be downloaded from www.apcupsd.org/manual/manual.pdf

By default, if the apcupsd service is running, the software will shut down the computer if there is a fault detected, such as a critically low battery. Instructions for disabling this can be found in the manual.

The manual also explains how to use the apctest utility, which tests both the connectivity and settings.

The installer will automatically set up the service to run at boot time and it puts an icon in the notification area of the Windows taskbar.

You can start it manually via the Start menu. You may also need to run the Apctray program to get the icon to appear in the taskbar.

Right-click on the icon on the taskbar to view the UPS status. You can also use this menu to set the icon to start automatically with Windows, view the event log and change other settings.

If you have no connection indicated from this icon, check that its configuration settings are correct, especially the port value. The port should be set to 3551, to match the port setting in the apcupsd.conf file. The IP address should be 127.0.0.1 (which refers to the local computer).

You can also use this settings window to disable status pop-ups from the icon.

If you need to change the apcupsd configuration, first stop the apcupsd service by selecting "Stop Apcupsd" from the start menu.

The icon will stay in your taskbar but it will complain about a network error.

After making changes to the apcupsd.conf file, start the service as before.

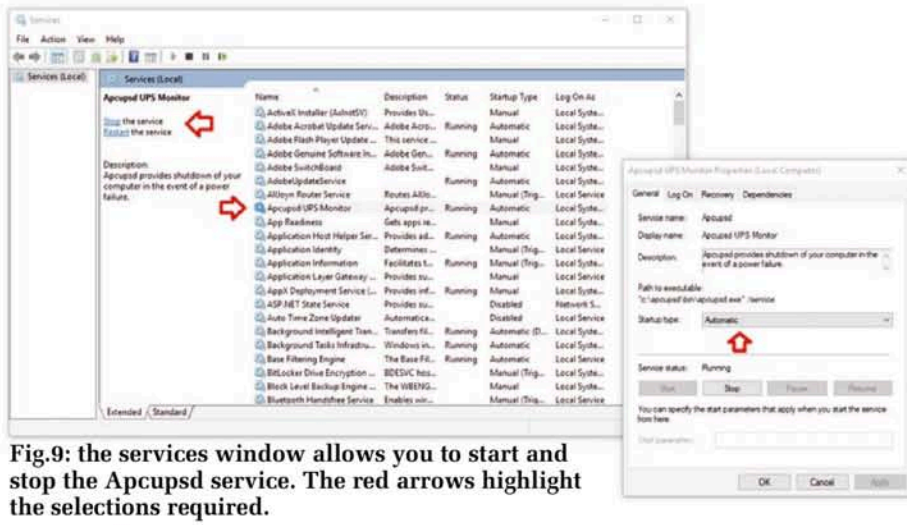

Fig.9: the services window allows you to start and stop the Apcupsd service. The red arrows highlight the selections required.

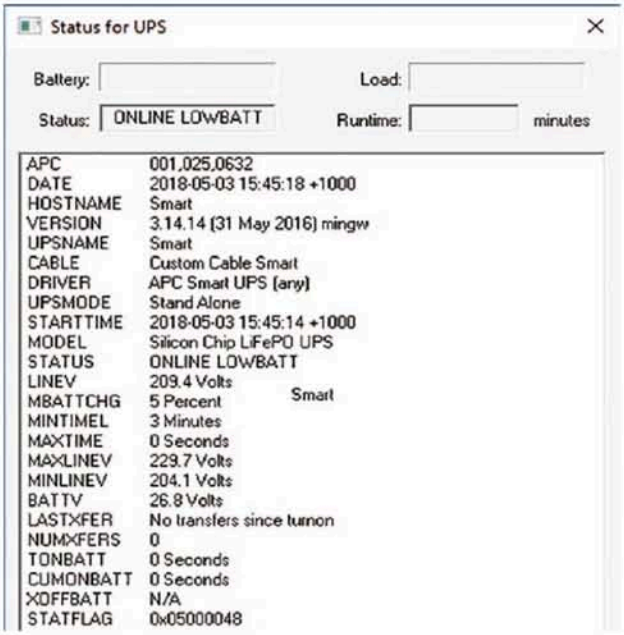

Fig.10: part of the status window showing the vital UPS operating parameters. Here you can see line voltage and battery voltage as reported by the Arduino, along with other statistics derived by the software such as time since last power failure, battery staus, etc.

Depending on your version of Windows, you may find that you can only start and stop apcupsd from the Services dialog.

This can be accessed through the Windows Run utility (accessible through the Start menu or by holding down the Windows key and pressing R), typing "services.msc" and pressing Enter.

Here, the service can be started, stopped and restarted, and more options can be found by right-clicking and opening the properties window, including whether the service starts automatically (see Fig.9).

At this stage, the UPS should be up and running and interacting with the computer. If you want to test the automatic computer shut-down feature without draining the battery, shut down the apcupsd service, edit the configuration file and find the BATTERYLEVEL parameter and change it to 95.

The value is a percentage and is calculated by the UPS based on the battery voltage level, with the "battery_ok" EEPROM setting representing 100% and the "battery_critical" parameter being 0%. Save the file and restart the service.

The UPS can then be tested by unplugging its mains lead and waiting a few minutes for the battery level to drop to 95%. Your computer should then shut down.

Remember to set the BATTERYLEVEL parameter back to 5% when you are finished testing to avoid premature shut-downs.

Once you are satisfied with the operation, check that the service is set to start automatically and remember to plug the computer's power cord into the UPS outlet.

Advanced calibration and tweaking

We showed the fifteen different EEPROM calibration values earlier but only explained the purpose of the first three. The remaining settings are:

- **BATTERY_CRITICAL** (option "D"). Defaults to 23V. This is the battery voltage at which the UPS will report 0% remaining capacity and initiate its own shut-down

  This is a fairly conservative value. We don't recommend setting it any lower than 21V. This should not damage the specified batteries.
- **BATTERY_MIN** (option "E"). Defaults to 25V. This was intended to be the threshold below which the unit will start warning the user, however, the current version of the software does not use it. It may be used in a future revision.
- **BATTERY_OK** (option "F"). Defaults to 27V. When the battery voltage is this value or higher, the remaining capacity is reported as 100% and the red LED remains off even if the inverter is running.
- **VIN_MIN** (option "G"). Defaults to 11V. This indicates the voltage above which the VIN rail will sit during normal operation. The software currently does not rely on this value but it may be used in a future version.
- **VIN_OK** (option "H"). Defaults to 11.5V. If VIN is above this voltage, the unit is assumed to be running off the 12V DC switchmode power supply. Below this threshold (but above VIN_MIN), it is assumed that the mains sense relay is powering the unit via RLY4.
- **MAINS_MIN** (option "I"). Defaults to 200V. When the mains RMS voltage drops below this level, the output will switch over to the inverter.
- **MAINS_DB** (option "J"). Defaults to 20V. This is the hysteresis value for MAINS_MIN ("DB" stands for dead band). The mains RMS voltage must rise at least this high above MAINS_MIN before the unit will switch back on.
- **MAINS_MAX** (option "K"). Defaults to 260V. If the mains RMS voltage rises above this threshold, the output will switch over to the inverter. It must fall below this by the hysteresis amount (by default, below 240VAC) before the output will switch back to mains.
- **MAINS_DELAY** (option "L"). Defaults to 10 seconds (10000ms). This is how long the mains RMS voltage must be within the normal range when the output is running off the inverter before it will switch back to mains.
- **VIN_DELAY** (option "M"). Defaults to 5 seconds (5000ms). Not used by the current version of the software as the unit shuts down immediately if VIN is below the critical threshold.
- **BATTERY_CRITICAL_DELAY** (option "N"). Defaults to five seconds. If the battery voltage remains below BATTERY_CRITICAL for this long, the piezo will sound continuously for one minute, after which the unit will shut down entirely.
- **VIN_CRITICAL** (option "O"). Defaults to 10.5V. If the VIN rail falls below this value, the unit will automatically de-energise RLY1-3 and then shut the Arduino control circuitry down. This normally will only happen when power switch S1 is turned off.

Some early UPS feedback from our readers . . .

Why 24V and not 12V?

I must ask the obvious question –why did you choose a 24V solution, rather than 12V, with the 2 x 12V batteries in parallel?

The 1200W inverters are virtually the same price, 12V or 24V. The current draw on each individual battery is the same, 2 x 12V parallel, or 2 x 12V serial.

Using 12V would delete the cost of a battery balancer, and I would think the cost of the small 12.6V transformer (a simple mains-sense relay could isolate the small Arduino from the now pair of batteries – imbalanced load not a problem).

The cost of 10A 12V, and 5A 24V LiFePO4 chargers appears about the same? Just wondering...?

Ian Thompson
Perth, WA

That seems like a perfectly logical alternative approach, Ian. But . . .

In fact, as part of our initial deliberations, we briefly considered it but quickly rejected it. We cannot recommend it.

The problem is that no two batteries are identical, with the same internal impedance and open circuit voltage.

That means that they can never share the load current equally and ultimately one battery takes more of the load.

Ultimately, it will lead to a reduction in life, compared to using the same two batteries in a series arrangement.

If you want another opinion, see ***www.enerdrive.com.au/connecting-epower-b-tec-lithium-battery-series-parallel***

To quote from that site:

"When lithium ion battery packs are connected in parallel and cycled, matching of internal resistance is important in ensuring long cycle life of the battery pack.

Specifically, a 20% difference in cell internal resistance between two battery packs cycled in parallel can lead to approximately 40% reduction in cycle life when compared to two batteries parallel-connected with the same internal resistance.

Series-connected lithium batteries would have the same reduction life if a battery balancer was not used."

Off-peak hot water tones

I have some interest in your latest UPS design.

My concern is our off-peak hot water signals sent down the mains interferes with lots of devices we have around the house.

For those not aware of these signals, it's a higher frequency (500Hz - 1kHz) signal superimposed over the regular 230VAC, that is used to switch off peak hot water systems on and off.

Switchmode power supplies mostly deal with it nicely, but not all. One brand of LED lamps we have pulsate while the signals are sent, the only way around it is to experiment with alternate brands, and replace all those with more "tolerant" lamps.

My current Eaton UPS isn't immune either, it commonly false triggers during the signals too.

I have an amplifier that buzzes, and I used to have a pre-amplifier that had an over-sensitive mute that conveniently muted audio at the least convenient time twice a day.

My point is, this is a big deal for us, as much of the side-effects of these signals are completely unacceptable.

The Arduino mains sense runs at 1000Hz, so it may "see" over voltage and under voltage conditions hundreds of times a second.

While a passive band-pass filter at the transformer output might work, it may interfere with the bad-mains sense, and this is probably fixable via firmware anyway.

I'm not being paranoid, I just don't want to commit to a significant cost outlay to find out it won't work, and can't be made to work after all.

John Tserkezis
via email

You raise an interesting point, John.

It is possible that the lightly loaded transformer we are using to sense the mains voltage may have an enhanced response to mains tones signals. However, while the Arduino senses the mains voltage at 1000Hz, the signal from the transformer is filtered by the attenuation network consisting of the 75kΩ and two 50kΩ resistors, shunted by a 100nF capacitor.

This will have a -3dB point of about 50Hz and the AC signal will be attenuated by 6dB/octave above that. Hence, a 1050Hz tone signal could be attenuated by about 50dB before sensing by the Arduino control shield.

If that proves to be insufficient attenuation, it could be increased by using a larger filter capacitor, eg, 220nF or 330nF.

UPS Inverters are SOLD OUT!

I have been a subscriber to your excellent magazine for many years, and have built many projects from its pages.

When I saw the UPS project in the May issue, I just had to build it, and now have all the required components except for the inverter, which I ordered from Giandel on 6th March.

On 8th March, I received confirmation from them that my order had been filled and despatched together with a tracking number. About a week later, I received a further email explaining that unfortunately, this inverter was out of stock, would not become available for several months, and that my payment had been refunded.

Since then, I have been searching for an equivalent inverter, but have only found one on eBay with an asking price of AUD800+.

My question is: Can you suggest where I may find a suitable alternative inverter?

Ian Hawke
via email

It appears that the UPS Project has either been very popular or someone is looking to make a killing in the hope that it will be!

A number of readers have pointed out that the Giandel online store has sold out of the specific model of inverter that we have used in the UPS Project. The Giandel online store provides a link to eBay, where the same inverter can be purchased for $899 (about six times the price we paid).

Curiously, an otherwise comparable 2200W 24V pure sinewave inverter (almost double the power of the inverter we used) can be purchased for around $270.

The question we are being asked is where can these (or an alternative) inverter be purchased.

We have done some research and we

would look at the following if we were building a UPS from scratch now:

www.ebay.com.au/itm/332254283761

This is the 2200W inverter we noted above. It will be substantially larger than the original inverter, but being Giandel branded and sporting a wired remote control, would probably be the most electrically compatible.

There are MANY other cheaper 24V 1200/1500W pure sinewave inverters on ebay – however most do not have remote control (see below) and you will have to wait for many of them to come from China!

www.elinz.com.au/Pure-Sine-Wave-Inverters

One of our staff members has suggested this online supplier, who appear to be based in Melbourne.

They have a 24V, 1500W inverter (SKU: INTPW24V1500) which is rated slightly higher but not dissimilar in size – so it should fit. It does not have a remote control function. At press time it was on sale at $209.99

www.jaycar.com.au/p/MI5712

The best match from Jaycar appears to be the MI5712, which is currently listed online at near half its 2017 catalog price.

It has a remote controlbut with a different socket so some changes to the control wiring and/or circuitry will be required/

www.altronics.com.au/p/m8018a/

The Altronics M8018A does not have a remote control facility, but otherwise appears to be suitable.

It's important to note that we have not tested any of these alternative inverters, and readers should check the dimensions, power rating, input voltage and the presence of a wired remote control (which may or may not have the same wiring as our prototype) before buying such an inverter.

Cheaper inverter lacks remote control

I am looking to build the SILICON CHIP UPS, and online I have found an inverter that looks suitable, (ie, 24V @ 1200W) but it does not have a wired remote control like the one used in your design. Could I still use it?

Bill Blenkinsole
via email

Yes, but . . . the UPS itself will work fine, however the Arduino will not be able to shut down the inverter in the event the batteries run down.

If the inverter has an internal low-voltage cutout, this case may provide some protection for your batteries. If there is no low-voltage cutout, then you run the risk of over-discharging the batteries.

The inverter will continue to run even when the UPS is shut down, meaning the batteries may be slowly discharged if you wish to store or transport the UPS.

The simplest solution may be a (large!) relay or switch on the 24VDC supply brought out onto one of the panels to allow the inverter to be manually shut down. A relay fed from the Arduino's VIN and GND connections would control the relay in an appropriate manner, but we suspect a relay large enough to switch 24V (into a large capacitor on the inverter) at up to 40A might place an excessive load on the 12V supply circuits.

$LiFePO_4$ batteries are expensive

I saw your article in the May 2018 issue about building your own UPS and I thought it was a great idea. So I started ringing suppliers to put together the items I would need to build it. I was shocked when I found out that the batteries alone would cost over $1000! How can it be competitive with commercial devices when they're so expensive? I can buy an Eaton UPS with a high power output for well under $1000.

D T
via email

Well, we did say up-front (in the very first sentence!) that it would not be cheap to build. However, if you hunt around you should be able to get the specified $LiFePO_4$ batteries ***in Australia*** *for well under $500 each (hint: phone Master Instruments!).*

The fact remains, though, that lithium-based rechargeable batteries are still considerably more expensive than lead-acid types. But they do have considerable performance advantages; primarily, a much longer lifespan if regularly deeply discharged.

We asked Duraid about how the cost of building our design compared to similar commercial units and he found the following:

- *The closest commercial equivalent to our design that Eaton has is the 5P1550GR-L which is a rackmount UPS with 1100W output and it uses lithium-ion rechargeable batteries. Its list price is US$2590 ($AU3450) – you could definitely build ours for significantly less.*
- *They offer no information on its battery capacity or runtime, however, given that the volume of its case is around one-quarter of ours, and indeed not much larger overall than the total volume of the batteries we used, we don't think it would operate for as long as our unit.*
- *The Eaton 5P3000RT is a larger unit (similar in size to our design) that uses lead-acid batteries. It has a very high power output (up to 2700W) but considerably lower battery capacity. It appears to have around 270Wh of batteries, ie, just a little over half that of our design and so its runtime is substantially lower by comparison, for a given load power. The cost is US$2106 ($AU2800); more than ours would cost to build.*
- *The Eaton 5P1500R is a one-rack unit lead-acid based UPS. It costs US$1308 ($AU1750); similar to what it would cost to build our design (perhaps slightly less). It also has a similar power rating at 1100W. But its runtime is very poor, as it only has around 160Wh of batteries. At 788W, it would last only eight minutes; our UPS will last around four times as long!*
- *The story is similar if you look at products from other manufacturers. So while our UPS design may be somewhat expensive to build, it's still cheaper than its direct commercial equivalents, at least at list prices and uses better battery technology than about 99% of commercial UPS designs.*
- *If the cost of the batteries we specified still puts you off, there is nothing stopping you from building it with cheaper lead-acid batteries. The total cost would almost certainly be under $1000 then, for a unit which would still outperform all the above (more expensive) commercial devices.*

You would need to use a different battery charger and it would be heavier but it would still be a worthwhile exercise. SC

500MHz frequency counter and a wideband preamp

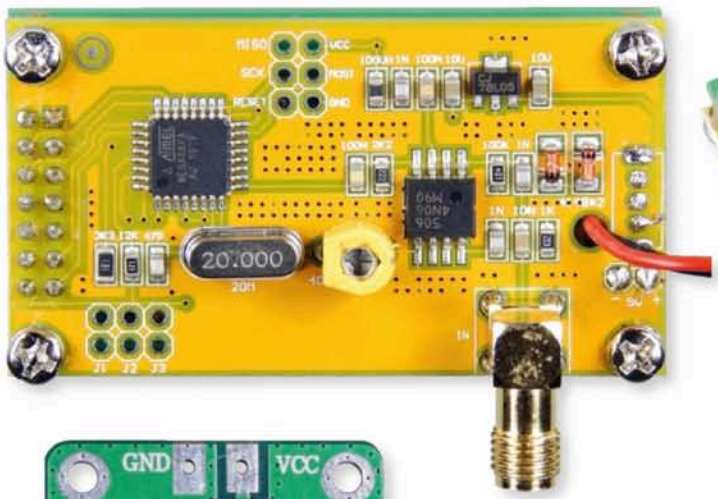

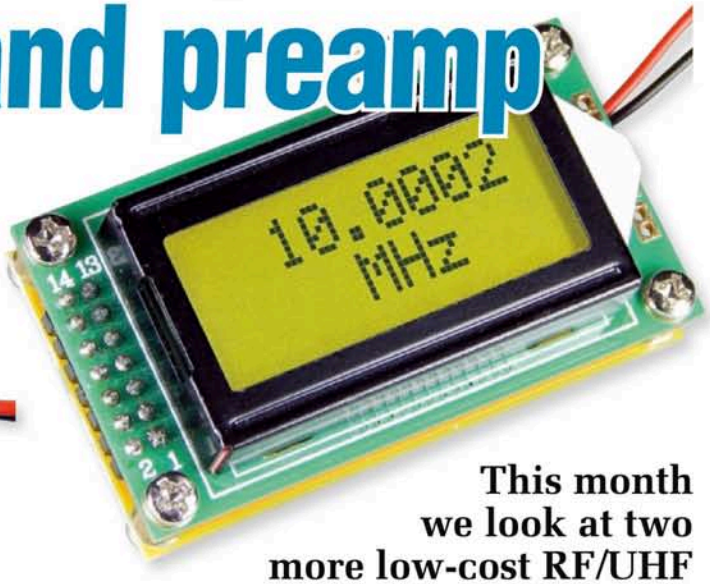

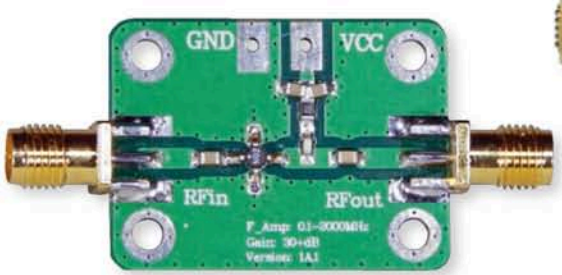

This month we look at two more low-cost RF/UHF modules. One is a tiny digital counter module which can operate up to 500MHz with a resolution of 0.1kHz. The other is a low-noise wideband amplifier module. The two modules can be combined to make a very sensitive frequency counter.

First, let's look at the 500MHz frequency counter module. It's pretty small, with the PCB measuring only 58 x 32mm; exactly the same size as the backlit 8x2 LCD display board it's mounted behind.

The whole assembly measures only 58 x 40 x 28mm, including the SMA input connector mounted on the underside of the counter PCB.

A subminiature on/off slider switch is fitted on the right-hand end of the same PCB, with the ends of a standard 9V battery clip lead attached nearby.

Before we go any further, I should note that the slider switch in the counter module pictured turned out to be very flimsy, with the actuator falling out after being used only a couple of times. Rather than try and fix it, I removed the rest of the switch (which is why it's missing in the pictures) and used a small toggle switch off the PCB to perform the same function.

Fig.1 shows the full circuit and IC1, an ATmega48PA microcontroller, does most of the work. As well as doing the frequency counting, it also displays the result on the LCD module. The other IC to its left (IC2) is obviously a prescaler but I can't find any real information on it; 5064N06 is what is marked on its IC package (it looks to be pin-compatible with the MB506 prescaler IC).

By measuring its input and output frequencies, I determined that it is a 64:1 prescaler, so IC1 only needs to measure frequencies up to 7.8125MHz (500MHz ÷ 64), which is well within its capabilities.

IC1 uses a 20MHz crystal (X1) for both its master clock and its counting timebase. To allow adjustment of the exact frequency for calibration of the counter, the module's designers have provided a 5-40pF trimmer cap to "pull" its frequency.

At first, it appears that the 8x2 LCD module has no connections to its built-in LED back-lighting but these are presumably made inside the module. There's no trimpot to adjust the LCD contrast but the default contrast seems to be fine.

There's provision on the counter PCB for a 6-pin header (shown at lower left in Fig.1) with the same connections as used for the ICSP connector on most Arduino MCUs. This would allow you to reprogram IC1 if you wish.

There's also provision on the counter PCB for three 2-pin headers for jumper shunts (J1-J3) but I haven't been able to find any information on their function.

All of the counter circuitry runs from 5V DC, derived from the 9V battery via REG1, a 78L05 regulator. The total current drain measured 57mA, much of which would be for the LCD backlight. Therefore it would be a

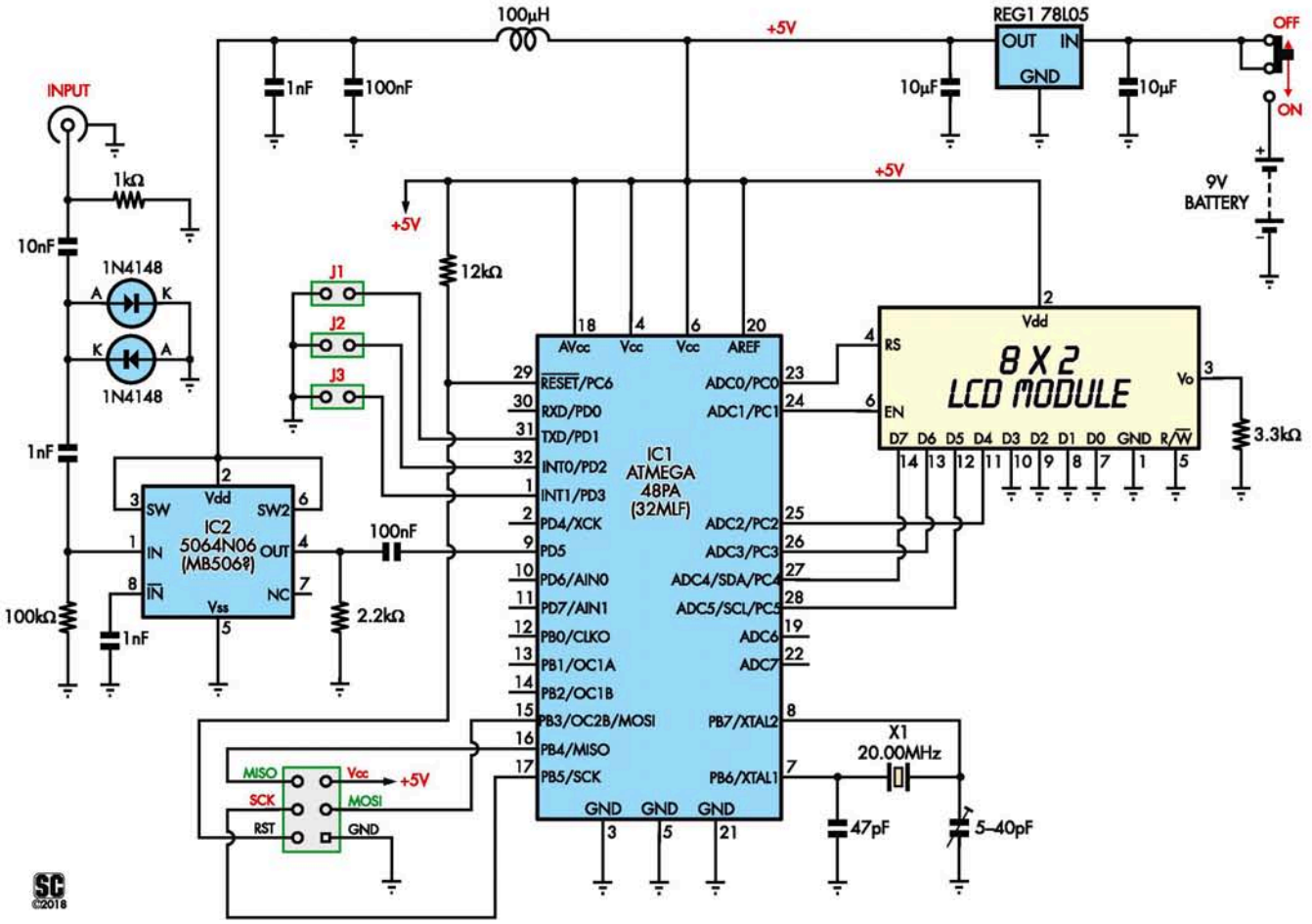

Fig.1: IC2 is marked 5064N06 and is most likely a variant of the MB506 prescaler IC. The MB506 can divide its input frequency by 64, 128 or 256, and is set to a division ratio of 64:1 by connecting SW & SW2 to V_{DD}. The 6-pin header is not fitted, but can be installed if IC1 needs to be reprogrammed.

good idea to power it from a 9V alkaline battery or a 9V DC plugpack. You could even use a 5V USB charger with its output wired directly to the output of REG1.

Trying out the counter

I powered the module using a 9V alkaline battery and connected its input to the 10.000000MHz output from a GPS-disciplined Rubidium vapour frequency standard.

Then I adjusted the frequency reading using the 5-40pF trimcap on the counter PCB. The adjustment was fairly critical and the closest reading I was able to achieve was 10.0002MHz, ie, 20ppm or 200Hz high. That's quite reasonable.

I then checked its operation over the full range of frequencies it claims to handle, using my Gratten GA1484B signal generator. With the generator's output set to 0dBm (224mV RMS), there were no problems measuring frequencies from 500MHz down to about 8MHz. Below 8MHz, I found that the

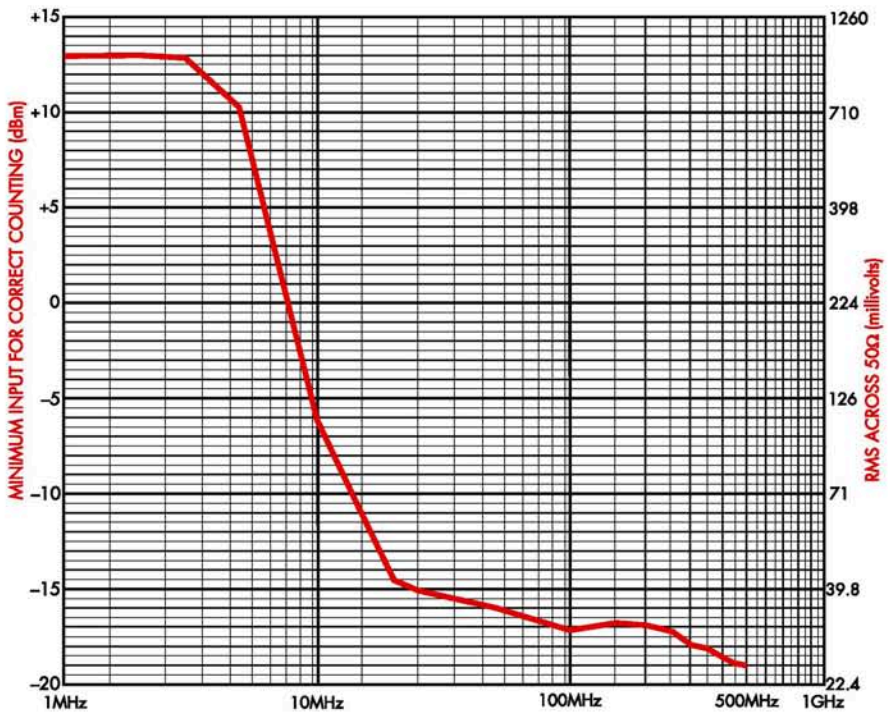

Fig.2: input sensitivity for the 500MHz frequency counter module over its full range. Below 1MHz no reading was recorded with an output level of +13dBm.

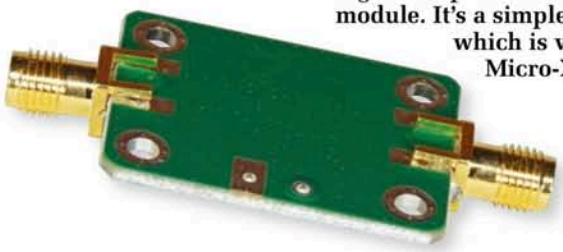

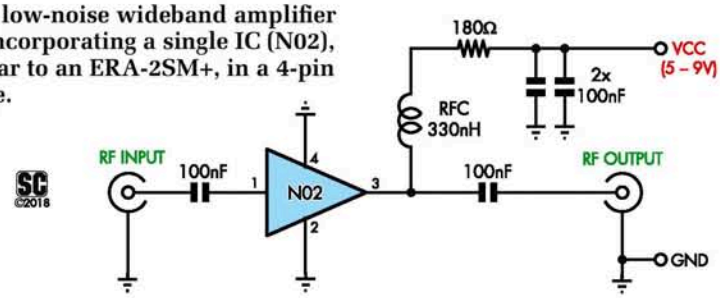

Fig.3: complete circuit for the low-noise wideband amplifier module. It's a simple design incorporating a single IC (N02), which is very similar to an ERA-2SM+, in a 4-pin Micro-X package.

signal level had to be increased somewhat to get a correct reading.

In fact, for frequencies below 3MHz I needed to crank up the generator's output to its maximum level of +13dBm (1.00V RMS); even so, I got no reading below 1MHz.

I then measured the input sensitivity for reliable readings over the range from 1MHz to 500MHz and the resulting plot is shown in Fig.2. The effective input sensitivity is below -15dBm (40mV) for all frequencies above 25MHz, falling to around -19dBm (25mV) at 500MHz. But it rises fairly steeply at lower frequencies to reach 0dBm (224mV) at around 7.5MHz and climbs further to +13dBm (1.00V) at 3MHz.

So although the mini 500MHz counter module is claimed to be able to operate down to 100kHz, its useful range is really from 1MHz to 500MHz.

At this point, I decided to try fitting three pin headers to the pads marked JP1-JP3.

Shorting JP1 did not appear to have any effect on the readings. JP2 caused the readout to only display 0MHz. This might be some sort of disabling or gating function for the counter.

Fitting JP3 causes the value displayed to be about 95.45% of the actual value. Overall these jumpers may be for a feature that didn't make it into the final product.

Mounting it in a case

Since its performance is quite good, I decided to build it into a UB3 Jiffy box, which is large enough to also house the 9V battery, making it a self-contained portable instrument.

I mounted the module itself behind the box lid/front panel using 9mm long untapped spacers and 15mm long M3 screws, replacing the original four very short screws on the top of the module.

I cut a 38 x 18mm rectangular window in the lid for the LCD and mounted a small toggle switch below it for on/off switching. I then drilled a 10mm diameter hole at the back for access to the module's SMA input connector. A strip of sturdy gaffer tape was also used to hold the battery securely in one end of the box.

You could build the module into an even smaller UB5 Jiffy box (83 x 54 x 31mm) if you don't need to include the 9V battery for fully portable operation.

Despite its flimsy on-board on/off switch, the 500MHz frequency counter has the potential to be quite useful for many applications. They're priced at $19 from Banggood (siliconchip.com.au/link/aak3). You can also find them on eBay or AliExpress for around $15 or less.

Low-noise preamplifier

Next up is a low-noise amplifier module. Its PCB measures 32.5 x 24.5mm, with SMA input and output connectors at each end and pads for a mini 2-way terminal block for power along one side.

The circuit for the module is shown in Fig.3. The amplification work is done by the "NO2" IC, which is similar to the Mini-Circuits ERA-2SM+ device used in our recent UHF Prescaler (siliconchip.com.au/Article/10643; May 2017) and 6GHz Frequency Counter (siliconchip.com.au/Series/319; October-December 2017) projects.

It's in the same kind of 4-pin Micro-X package and the circuit of Fig.3 is virtually identical to the recommended circuit for the ERA-2SM+.

To check out the module's performance, I connected it to a 9V regulated supply (it draws around 40mA) and linked its RF output to an Agilent V3500A RF power meter.

Then to check its noise performance I terminated its input with 50Ω and measured its output over the module's claimed range of 0.1MHz-2GHz and beyond (up to 4GHz, in fact).

The results of this first test are shown in the blue curve of Fig.4, with the noise level axis on the right. The module's noise level is close to -50dBm across the entire range so it qualifies as a low-noise amplifier or "LNA".

For the frequency response, I drove the input with my Gratten GA1484B signal generator, using a short SMA cable and a T-connector at the input with a 50Ω terminator. I ran the signal generator from 0.1kHz to 4GHz with its output level set to -30dBm.

I ran the same test with just the test cable and subtracted the cable loss from the earlier results, giving the red curve in Fig.4, which corresponds to the gain axis.

This shows a gain figure of around 30dB up to 1GHz, dropping to 24dB at 2GHz, then to 16dB at 3GHz and a whisker less than 12dB at 4GHz. So the module provides a useful amount of gain up to 2GHz.

Finally, I did some measurements to see the input signal levels that the module could handle before compression took place.

I actually used a second module for this testing, and the second module turned out to have lower gain than the first, by about 3dB. That's why the levels shown in Fig.5 are all a little lower than in Fig.4.

At just about all frequencies, the maximum input level without compression is close to -20dBm, or 22.4mV across 50Ω. Above this, gain falls away. So it's better to think of it as a low-noise preamplifier rather than a power amplifier.

They are available from Banggood (siliconchip.com.au/link/aak4) for around $10 each, or even less on eBay.

You'll pay more for a pair of edge-mount SMA connectors!

Teaming it up with the frequency counter module

Since both modules can be run from 9V DC, you could power them from the same supply, although the combined current draw of nearly 100mA is on the high side for a 9V battery.

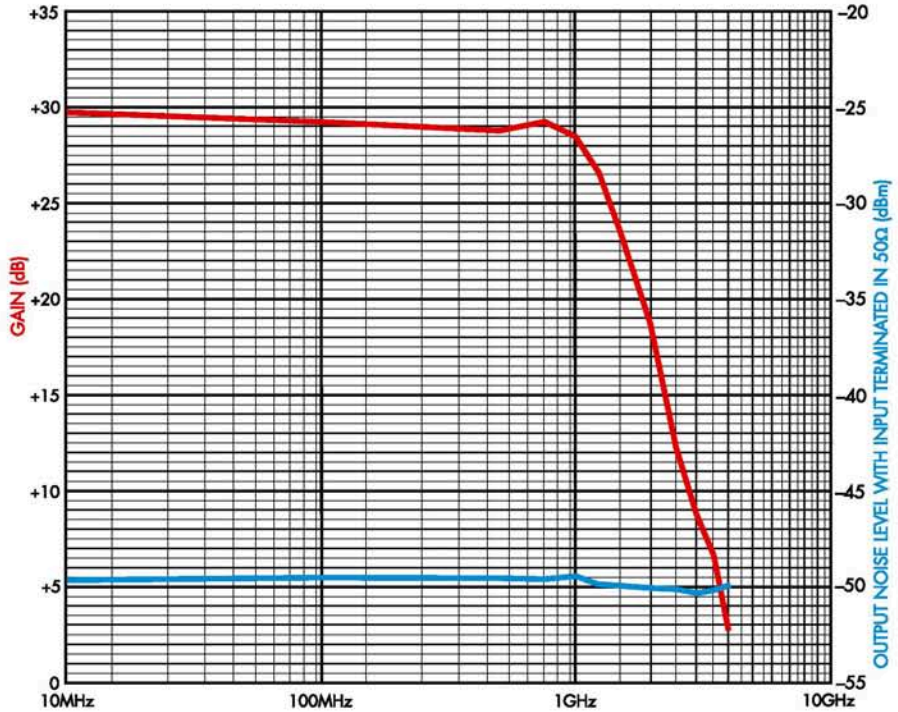

Fig.4: the blue curve represents the noise output of the preamplifier module when terminated with 50Ω, from 10MHz to 4GHz. The red curve shows the gain of the preamplifier over the same range.

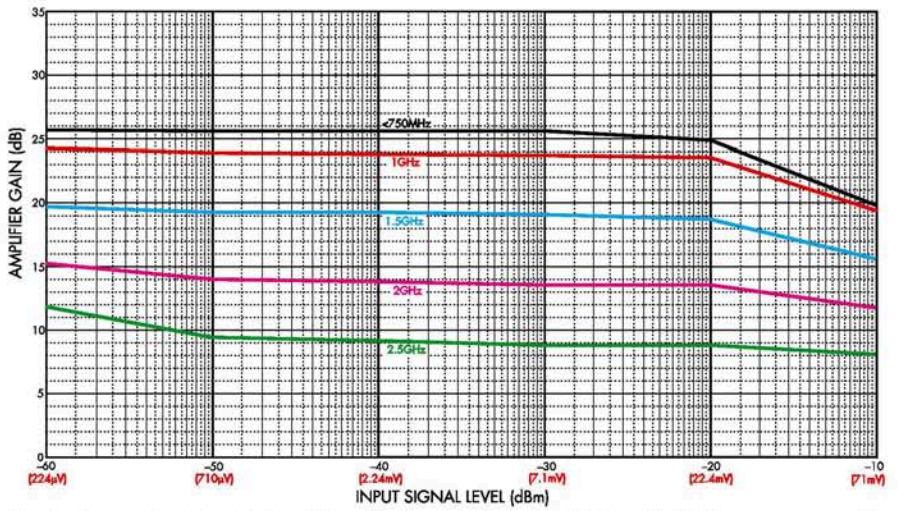

Fig.5: shows the input signal levels the module could handle before compression took place. Note that a second module was used with these tests, one which had a gain about 3dB lower than the module used for the tests in Fig.4.

You would definitely need to use an alkaline 9V battery if you don't want to power them from a plugpack.

It's simply a matter of using a short SMA patch cable to wire the output of the LNA to the input of the frequency counter and you will have a counter with a sensitivity of around -40dBm from 20MHz to 500MHz, falling to -30dBm at 10MHz, -20dBm at 6MHz and around -10dBm at 3MHz.

This would mean, for example, that you could connect a whip antenna to the LNA input and "sniff" the transmission from an RF transmitter which operates in the 10-500MHz range by simply bringing the two antennas close together. SC

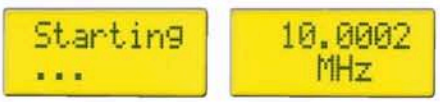

The 8x2 LCD on the 500MHz frequency counter module will display up to 4 digits of precision.

Silicon Chip Binders

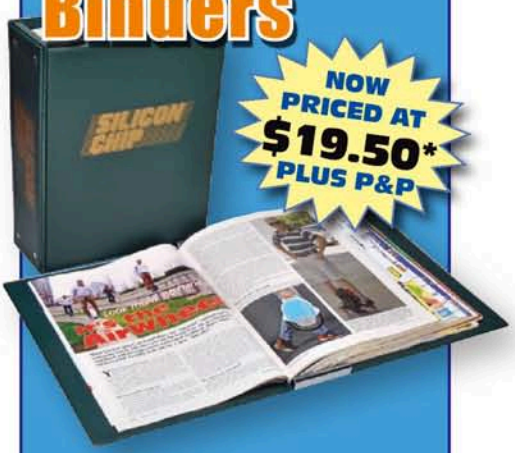

Are your copies of SILICON CHIP getting damaged just lying around in a cupboard or on a shelf? Can you quickly find a particular issue that you need to refer to?

Keep your copies safe, secure and always available with these handy binders

These binders will protect your copies of SILICON CHIP. They feature heavy-board covers, hold 12 issues & will look great on your bookshelf.

★ 80mm internal width

★ SILICON CHIP logo printed in gold-coloured lettering on spine & cover

Silicon Chip Publications
PO Box 139
Collaroy Beach 2097

Order online from www.siliconchip.com.au/Shop/4 or call (02) 9939 3295 and quote your credit card number. *See website for overseas prices.*

CIRCUIT NOTEBOOK

Interesting circuit ideas which we have checked but not built and tested. Contributions will be paid for at standard rates. All submissions should include full name, address & phone number.

Humidity Controller for Cheesemaking

Home cheesemaking is an increasingly popular activity. Maturing cheeses usually requires an environment in which temperature and humidity are controlled.

In the past this was achieved in caves in which the temperature and humidity were ideally suited to cheese maturation.

For the amateur cheesemaker, the ideal temperature is achieved most conveniently by using a wine fridge in which cheeses can be placed and held at 10-13°C.

Attaining the required level of relative humidity, usually 70-90%, is more difficult. While humidity may be raised by placing a container of water into the refrigerator, it is still difficult to attain a relative humidity above 75% in this manner.

My solution is to use a personal ultrasonic humidifier regulated by a PICAXE 08M2 microcontroller connected to an analog humidity sensor. The personal humidifier I chose is powered by a 24V DC plugpack and it is this DC supply which is switched by the humidity controller circuit.

The PICAXE chip, IC1, receives input from a HIH-4000-001 Honeywell humidity sensor (HS1). The circuit is designed to regulate the humidity in the refrigerator to one of three values, ranging from 70 to 90% and these are selected by three-position switch S1.

This switch pulls one of the PICAXE's digital inputs C2, C3 or C4 high. When deselected, these are held low by 10kΩ resistors to ground. The program detects which pin is high in the main subroutine and branches to one of three humidity regulation subroutines.

Each subroutine reads the voltage from the humidity sensor. This voltage is defined by the following equation: V = 0.0327(RH%) + 0.8, where RH% is the relative humidity. The PICAXE chip has an 8-bit analog-to-digital converter.

If the voltage is under the level required as set by S1, output pin C0 is driven high and turns on the relay RLY1 via NPN transistor Q1. This switches on the humidifier, which by default remains on for a minimum of 10 seconds. This can be altered by lengthening the pause in each subroutine.

After this time, the humidity level is re-checked and the humidifier will remain on until the humidity reaches the target level.

Power is from a 9V DC plugpack and this is regulated to 5V for IC1 and HS1 by a standard 78L05 linear regulator. Diode D1 protects Q1 by absorbing the back-EMF when RLY1 is switched off.

The circuit is easily built on Veroboard and can be housed in a Jiffy box. I fitted mine with a 3.5mm stereo socket into which the humidity sensor is plugged, two sockets for connecting the 24V DC input and output and a 9V DC input socket to power the circuit.

I assembled the humidity sensor and its load resistor into a separate module that is placed inside the refrigerator and held in place using Velcro dots.

Constructors will need a copy of the free PICAXE Editor (v6) software and an AXE027 USB download cable to program the chip.

The software can be downloaded from the SILICON CHIP website, free for subscribers.

Tony Verberne,
Heidelberg, Vic. ($60)

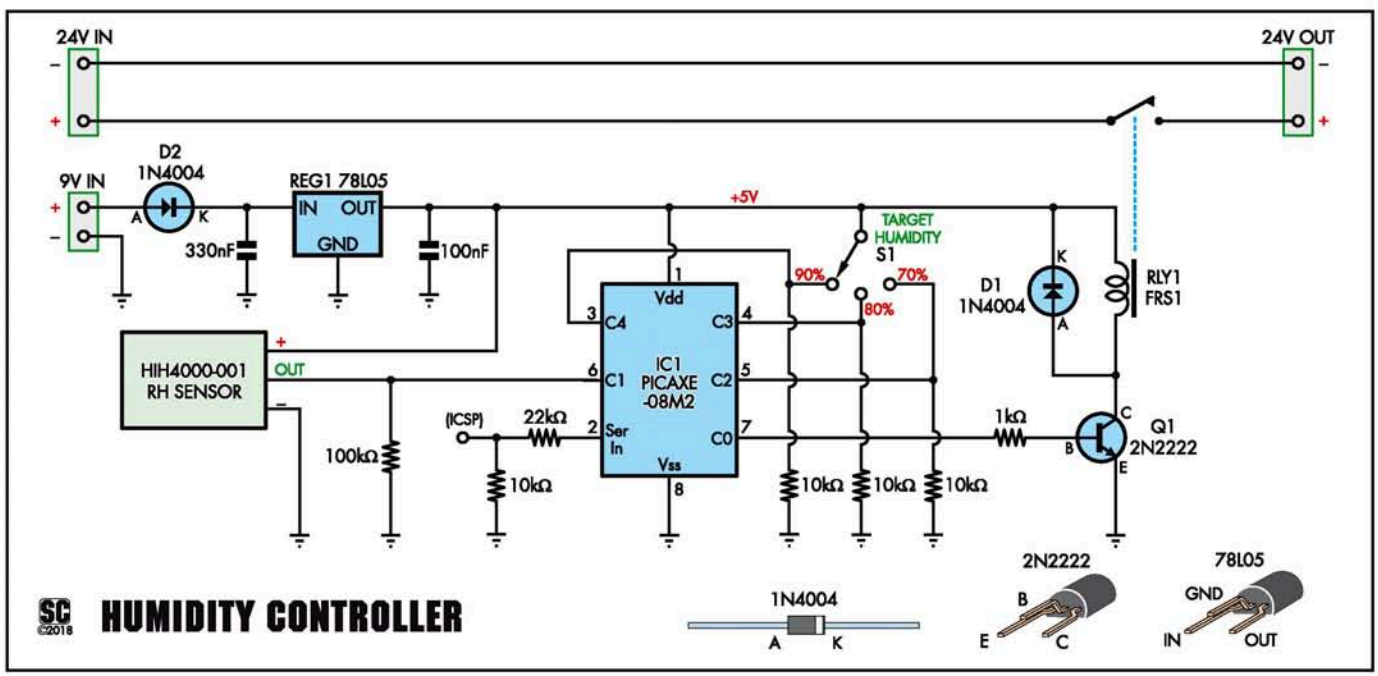

Circuit Ideas Wanted

Got an interesting original circuit that you have cleverly devised? We will pay good money to feature it in Circuit Notebook. We can pay you by electronic funds transfer, cheque or direct to your PayPal account. Or you can use the funds to purchase anything from the SILICON CHIP Online Store, including PCBs and components, back issues, subscriptions or whatever. Email your circuit and descriptive text to editor@siliconchip.com.au

Multi-pattern, multi-speed LED chaser

This circuit is built around an ATmega8 microcontroller (IC1) and 32 LEDs which form a cross, with eight LEDs in each branch. The easiest way to build it is with four 8-segment common cathode LED bar graph displays but you could use discrete LEDs.

The cathode terminals of each group of eight LEDs are connected together and then through a 47Ω current-limiting resistor to one of four pins on Port C of microcontroller IC1 (PC2-PC5; pins 25-28).

The anode terminals of the individual LEDs in each bar are tied together and connected in a similar manner, via 150Ω current-limiting resistors, to the Port D pins of IC1 (PD0-PD7; pins 2-6 & 11-13).

Thus, while the LEDs are physically arranged in a cross shape, they are electrically wired up as an 8x4 matrix.

To achieve individual LED control, only the LEDs in a single bar can be lit at one time, by pulling one of the PC2-PC5 pins low while driving the eight PD0-PD7 pins to control the state of the LEDs in the selected bar.

Thus, the chaser uses the persistence of vision, the fact that a rapidly flashing light appears to our eyes to be solidly lit.

The chaser display consists of two main modes, each with several patterns and different speeds. In the first mode, the LEDs of one line light up at a time and the line "spins" clockwise or counterclockwise at varying rates. At the same time, the number of LEDs that are on change as the display revolves in each direction.

In the second mode, one or more LEDs of the four lines light up to create different patterns at varying rates. The lines do not appear to revolve in this mode.

The details of the patterns are described in the software. The software can be downloaded from the SILICON CHIP website, free for subscribers.

The circuit can be powered by a 5V DC power supply such as a USB charger or plugpack. You can see a video of the prototype in operation at: https://youtu.be/V0TguJsFW9I

Mohammad Moridi, Tehran, Iran. ($60)

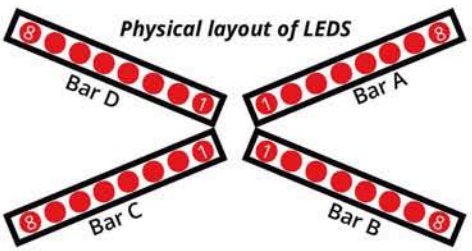

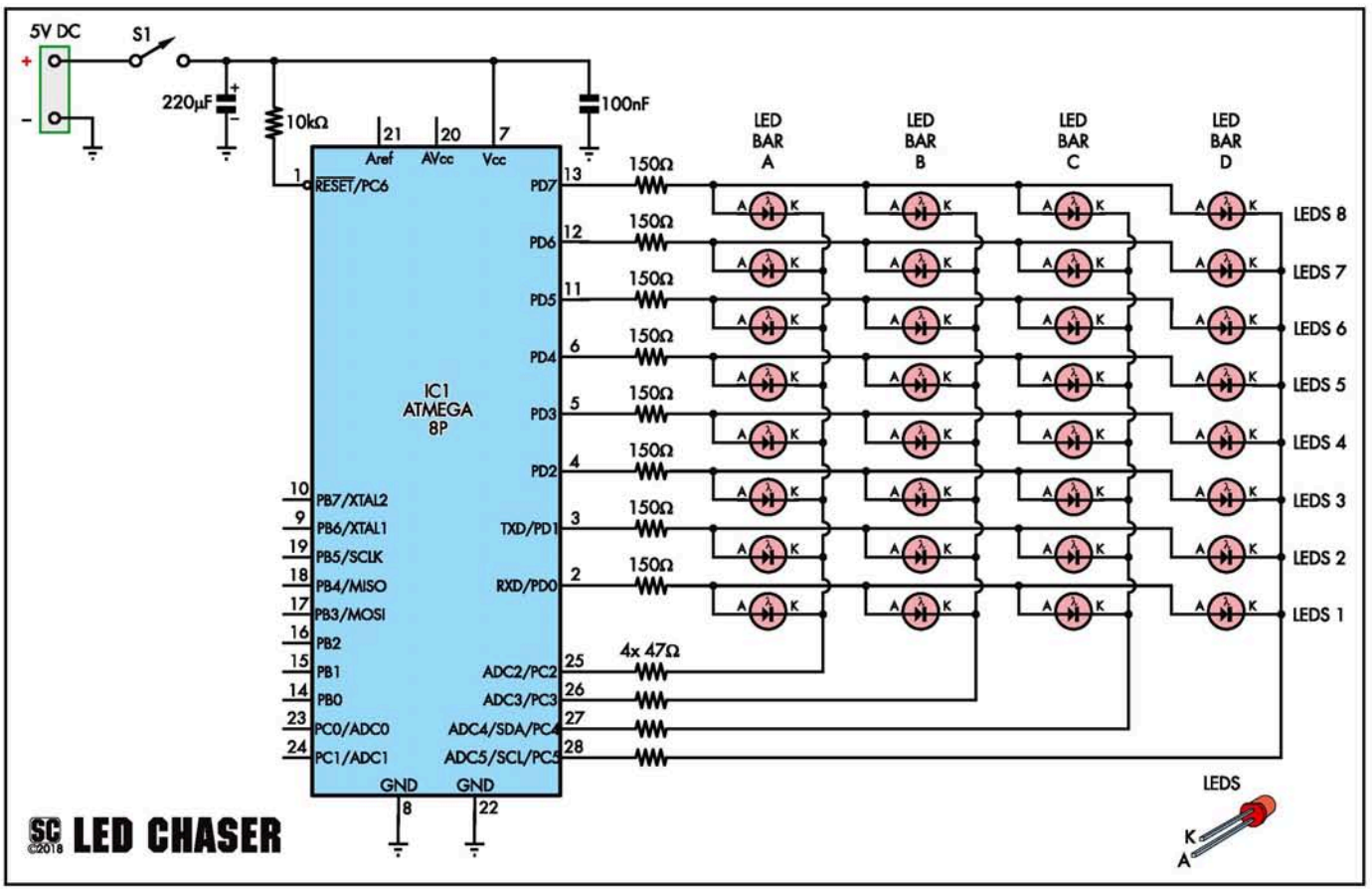

Using two cheap ICs to generate ±15V DC from 5V DC

This circuit can be used to generate split rails to power op amps or similar circuitry from a 5V DC supply, such as a USB charger or USB battery bank.

Split rails refers to the fact that they are the same voltage but opposite polarity, ie, the ±15V supply rails have a 30V potential difference but are centred on 0V, so that op amps powered from these rails will have a symmetrical output swing around ground.

The 5V DC supply is fed in via CON1 and passes through F1, a 2A fuse. This supply is stabilised by two 1000µF capacitors and two 100nF capacitors, located near the V_{CC} pins of IC1 and IC2. These are both MC34063 switchmode regulator ICs.

Besides being commonly available and low in cost, these have the advantage that they can be configured for multiple different purposes, including voltage step-down, step-up and inversion.

In this case, IC2 is being used to step up the 5V input to provide a +15V output while IC1 is being used to invert the 5V input and boost it to -15V.

Looking at IC2 first, pins 1 and 2 are respectively the collector and emitter of the internal 1.5A switching transistor while pin 8 is the output transistor base supply (fed to the internal driver transistor collector).

Pin 7 is used for sensing current. The current limit is based on the difference in the voltage between pins 7 and 6, where pin 6 is V_{CC}. This voltage drop is proportional to the current flowing through inductor L2 due to the 0.22Ω series sense resistor, between pins 6 and 7.

The 470pF capacitor between pin 3 and ground sets the switching frequency of IC2 to around 50kHz. The on and off time of the internal transistor varies, giving a varying duty cycle to control the output voltage.

When the internal transistor is on, current flows from V_{CC} (pin 6, +5V), through the 0.22Ω sense resistor and 47µH inductor L2, into pin 1 of IC2 and then out pin 2 to ground. This charges up the magnetic field of L2.

When the internal output transistor switches off, the collapsing magnetic field induces a voltage across L2 which is added to the 5V supply voltage present at pin 7, to produce a higher voltage at the anode of schottky diode D3. D3 becomes forward-biased and so the 1000µF and 100nF capacitors at its output charge up to +15V.

When the capacitor charge reaches 15V, the feedback voltage to pin 5 of IC2 becomes 1.25V (15V ÷ [1 + 11kΩ ÷ 1kΩ]). This is equal to the IC's internal reference voltage and as a result, the internal transistor is switched on later in each cycle. This reduction in its duty cycle stabilises the output voltage at 15V.

This supply is fed directly to CON4, the non-filtered +15V output. The ripple due to the switching action of IC2 is reduced by an LC low-pass filter comprising 100µH inductor L4 and a 1000µF capacitor and fed to CON5,

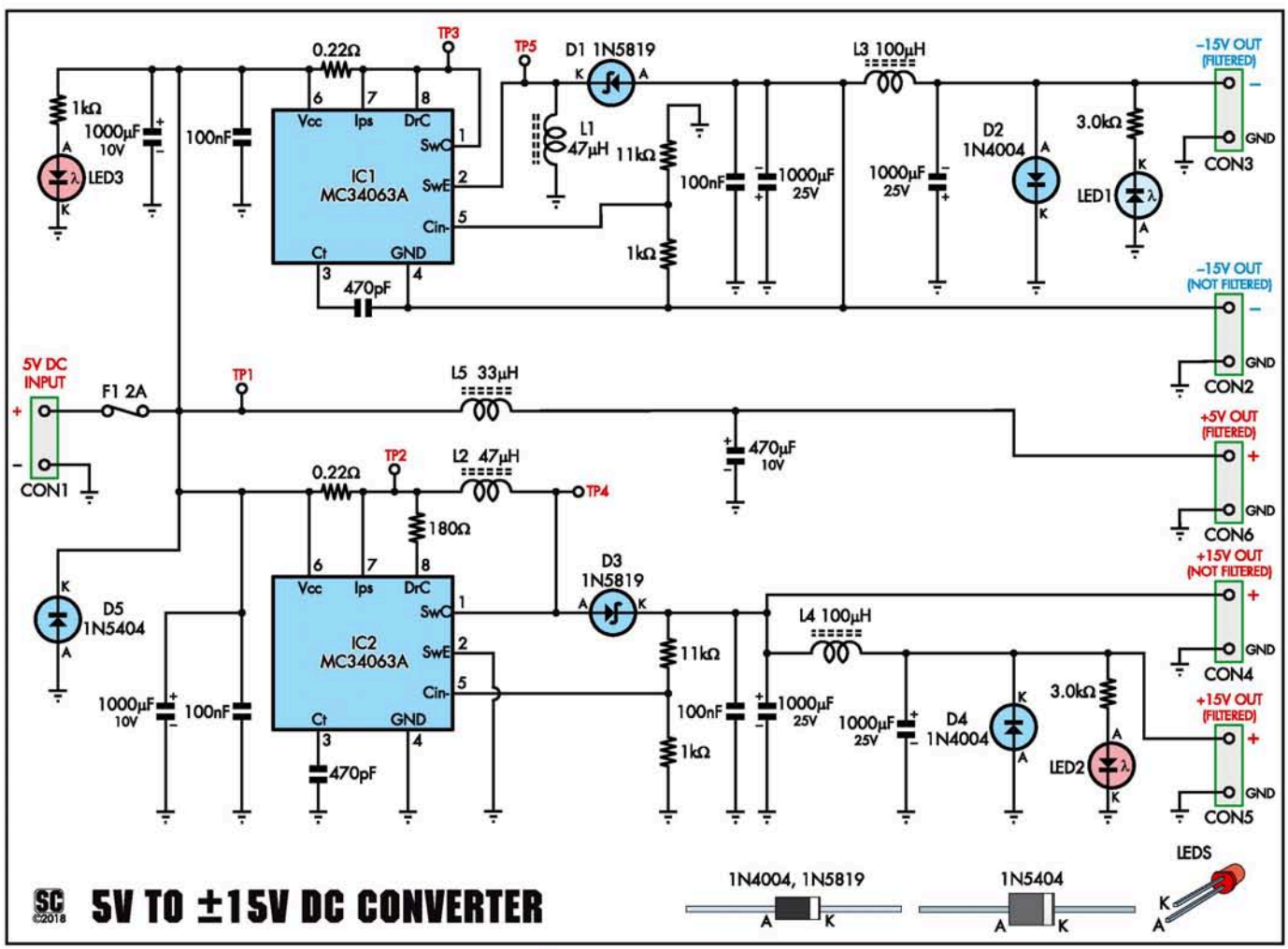

the filtered +15V output. It's also used to light LED2.

Diode D4 prevents the output voltage at CON4 and CON5 from being pulled negative by a load connected between the +15V and -15V terminals when the supply is switched on or off.

Inverting regulator

The configuration of the circuit around IC1 is slightly different than for IC2, so that the polarity of the output voltage is reversed. When the internal transistor in IC1 switches on, the +5V supply at pin 7 is fed through from pin 1 to pin 2.

Current then flows through inductor L1 to ground. During this time, the inductor's magnetic field charges up.

When IC1's internal output transistor switches off, the collapsing magnetic field of L1 causes the cathode of schottky diode D1 to become negative relative to ground.

It's negative rather than positive because current is being sourced into the end of L1 which is connected to diode D1 when IC1's internal transistor is on, whereas in the case of L2, current is being sunk from the end which is connected to D3 when IC2's internal transistor is on. Thus the polarity of the voltage developed when the magnetic field collapses is the opposite.

When the voltage at the cathode of D1 goes negative, this forward-biases D1 and charges up the 1000µF and 100nF capacitors at its anode. Because it's a negative voltage, the feedback to IC1 is different than for IC2. IC1's ground pin 4 (and one end of the 470pF timing capacitor) is not connected to 0V but instead to the -15V output.

The voltage divider connecting to pin 5 of IC1 uses the same resistor values as for IC2, again giving a division ratio of 12 but this time, ground is the more positive voltage and so it is connected to the top of the divider.

The result is that the voltage at pin 5 of IC1 is still 1.25V relative to pin 4 (GND), but pin 4 is not at 0V but at -15V in this case.

The unfiltered -15V rail produced is fed to CON2 and another LC filter, LED and diode (as for the positive output) provide the filtered output at CON3.

There is also an LC low-pass filter at CON6, to provide a filtered +5V output to power circuitry which may be sensitive to electrical noise. This filter should reduce any ripple or hash present on the incoming +5V supply, as well as reducing the ripple on this rail due to the switching operation of IC1 and IC2.

Diode D5 prevents the +5V rail from being pulled negative while LED3 lights up to show that 5V power is present.

Petre Petrov,
Sofia, Bulgaria. ($70)

LED logic display for circuit development

When you're developing a circuit, especially if it includes a microcontroller, there are times where you need to be able to simultaneously see the logic state (high or low voltage) at various points in the circuit.

This simple LED module is easy to hook up to your circuit so that you can see what it's doing at any given time.

It's essentially a simple logic probe but with a 10 LED bargraph display so that you can sense the state of ten different pins at once.

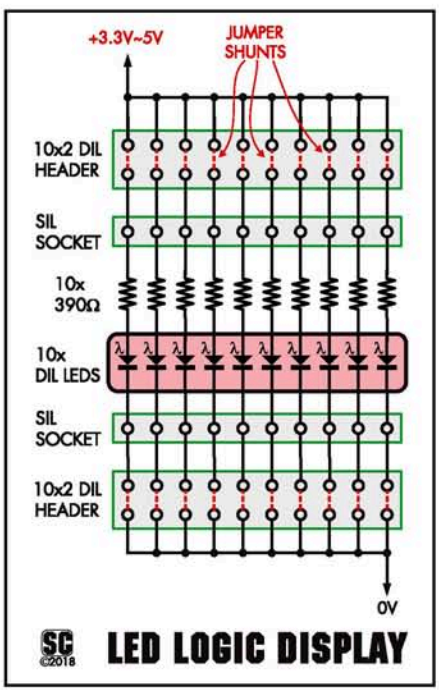

Each LED has a series current-limiting resistor and can be connected so that it is on either when driven high or low.

To light the LED when a voltage is high, place a jumper across the bottom header corresponding to one of the LEDs and connect the signal to the bottom pin of the top header for that same LED.

Or to light the LED when a voltage is low, place a jumper across the top header corresponding to the desired LED and connect the signal to the top pin of the bottom header for that LED.

Connections can be made between your development board and the headers on this unit using individual male-female or female-female jumper leads, which are readily available.

The design also includes two 10-pin female header sockets, connected to one side of each of the DIL headers, for those times when you may want to connect a bare wire or wire terminated in a pin connector.

I have designed it with 390Ω current-limiting resistors as these give a good brightness level when driven with a voltage in the range of 3.3-5V while drawing less than 1mA.

If you use a high-brightness LED bargraph (or individual high-brightness LEDs), you could use higher value resistors which would load the test circuit less.

You can build this easily on a 10-strip piece of veroboard. You just need to cut the tracks under the DIL LED array, resistors and between the two rows of pins on each DIL header.

Gianni Pallotti,
North Rocks, NSW. ($45)

VINTAGE RADIO

By Ian Batty

The 6-transistor Motorola 66T1

This little transistor radio from Motorola may not look anything out of the ordinary but it did have some very interesting features at this early stage of transistor development. The standout aspect would be the double-sided PCB.

In 1928 the rapid uptake of domestic valve radios was being retarded by the cost and drawbacks of batteries.

Typically, the sets in this era had "A", "B" and "C" batteries. While it was possible to provide the "A" supply with a car battery, "B" and "C" batteries were expensive. But with more and more homes getting mains power, enterprising designers were coming up with the "battery eliminator", a mains-powered supply able to deliver a variety of high tension and bias supplies.

Chicago brothers Paul V. & Joseph E. Galvin then bought the bankrupt Stewart Battery Company's plans and plant at auction. Beginning with battery eliminators and looking to expand, Paul Galvin challenged his engineers to design a new product: an inexpensive car radio.

Galvin coined the name "Motorola" from "motor" and "ola", a common suffix of the day roughly meaning "little" and seen elsewhere in Moviola, Victrola and other proprietary names of the period.

Moving on to equipment for government customers such as police, Galvin gained lasting fame as the designers and manufacturers of the revolutionary BC-611 "Handy-Talky". Battery-powered, using the just-released all-glass B7G valves and able to be carried and used in one hand, the BC-611 became the mainstay squad radio for United States' forces and set the standard for lightweight portable transceivers.

Motorola's offerings in the 1950s and 1960s ranged from car-mounted radio-telephones to radios and televisions. Catching the solid-state wave of the 1950s, Motorola offered the first high-power germanium transistor in 1955.

Neil Armstrong's famous "One small step for man..." was relayed to the Lunar Excursion Module over a Motorola transceiver.

Transistor portables

Although not first to market with a transistor set, Motorola were in there early. Their first five-transistor 56T1 used a transistor demodulator, directly driving a single-transistor Class A output stage. Class A output stages were a common feature of many manufacturers' first outings.

The audio circuit of the 66T1 is similar to the GE675, previously covered in September 2015 (www.siliconchip.com.au/Article/9015).

This Motorola 66T1 was made in 1957, 61 years ago! It's a six-transistor design using a similar RF/IF section to the GE675 but with a transformer-coupled Class-B push-pull output circuit.

Given Motorola's innovative heritage, you'd expect the 66T1 to be different from sets made by other manufacturers and it does not disappoint.

For example, the 66T1 is housed in a metal case, which would ordinarily prevent the use of any internal antenna, loop or ferrite rod. Motorola fixed that problem by putting the ferrite rod into the moulded plastic carrying handle. This handle can fold for compact stowage or be canted backwards to prop the set at an angle.

The overall dimensions of the case are quite small, with a total volume of some 500ml. This is partly achieved by having the batteries in the back shell, rather than accommodating them with the circuit board and speaker.

However, perhaps the most interesting aspect of this Motorola set is that it has a double-sided circuit board. Yes, it has tracks on both sides, although all the components are soldered to the visible side, as shown in the accompanying photos.

You might have thought that double-sided PCBs were a comparatively recent development in electronics, but here it is in a tiny transistor radio made over 60 years ago!

I have not included a photo of the underside of the PCB since it is soldered to the metal chassis and it would require major surgery to remove the PCB and expose its underside. This also makes it quite difficult to remove and replace components. Both sides of the PCB are depicted in a diagram on Ernst Erb's Radiomuseum site.

The double-sided PCB would have demanded careful design and precision manufacture. That PCB and the metal case have the advantage of improved shielding that reduces potential feedback, and the 66T1 is notable for not using neutralisation in its IF stages.

The tuning dial is large, and its knurled edge allows easy one-finger tuning. In common with US-designed sets of the era, the dial includes the Civil Defence Conelrad tuning markers at 640kHz and 1240kHz. I have discussed these in previous Vintage Radio articles, such as in January 2016 (www.siliconchip.com.au/Article/9780).

The 66T1 has a 6V supply coming from four AA cells, and the battery label shows insertion for carbon-zinc or mercury cells, the latter having reversed polarity on their terminals. Mercifully, mercury cells were a passing phase, as I've seen several fine "keychain" radios rendered unrepairable by leakage of the mercury cell's highly corrosive electrolyte.

NPN germanium transistors

Like many early solid-state radios, the 66T1 uses grown-junction transistors in the RF/IF stages. The grown-junction process worked best when producing NPN transistors, and this technology dominated initial RF/IF transistor production.

Alloy-junction transistors which followed later, while offering simpler manufacture and better yields, could only be used for audio until full development was reached. Hence the 66T1 uses NPN transistors for the converter and both IF amplifiers, and three PNP types in the audio section.

The circuit begins with transistor V1a, 2N172 mixer-oscillator (converter), with collector-emitter feedback. This design allows the ferrite antenna rod's tapping to feed the base with no combined local oscillator signal.

It works about as well as collector-base feedback but has the advantage of allowing signal injection directly onto the base for testing and alignment.

The tuning capacitor, as in most transistor sets, uses the cut plate design for the local oscillator, so there's no padder. E1, a proprietary germanium diode, connects between the top of the local oscillator's coil's tuned winding and the +6V supply. It's there to limit the local oscillator's activity; excessive oscillator output is prevented by E1's shunting effect if the oscillator voltage exceeds 6V on its positive excursion.

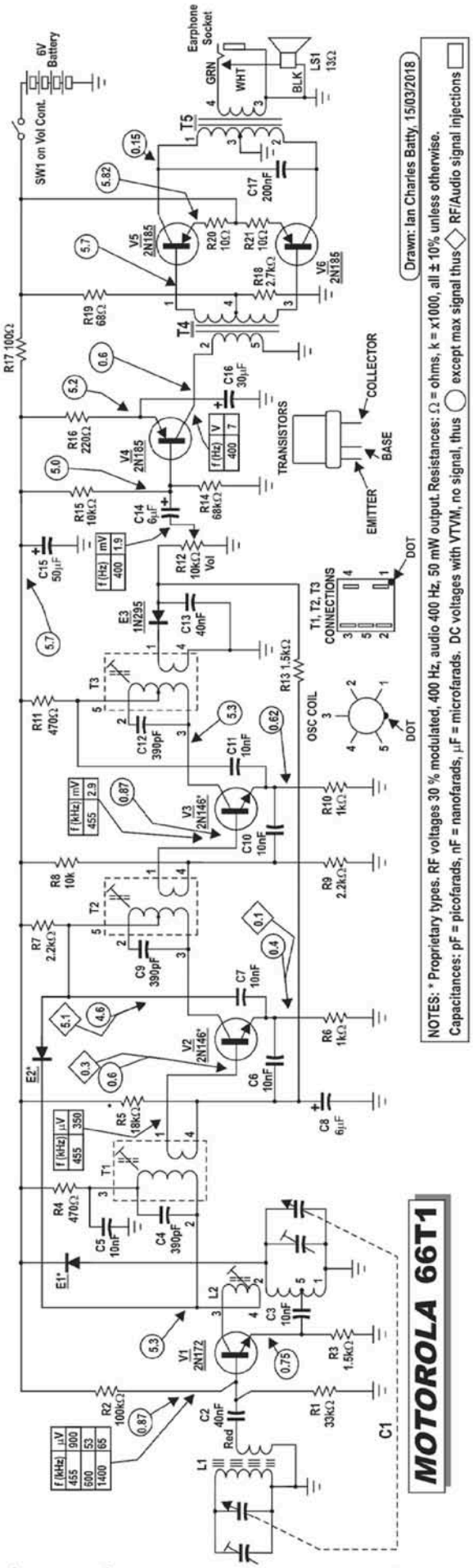

The three IF stage transistors (V1-V3) are NPN types, while the three 2N185 audio transistors (V4-V6) are PNP.

The ferrite rod antenna for the Motorola 66T1 is contained in the carry handle, due to the metal case shielding any ferrite antenna. Unfortunately, this means that signal reception varies changes when you move or touch the handle.

At only around 70mV, V1's biasing might seem much too low for operation. This voltage is measured with the self-oscillating mixer actually in oscillation. It's common for these circuits to "start" in Class-A (a bias of maybe 200mV), but then to shift into the Class-B operation that gives the non-linearity needed for mixer operation.

Killing the local oscillator saw the base voltage drifting up to give a more normal V_{BE} of around 200mV (Remember, these are all germanium transistors, with much lower bias voltages than silicon types). I've tried this test for local oscillator activity on many sets, but with varying results.

I still recommend using the radiation test: tune a second set to the high end of the band and listen for the "swoosh" as you tune the suspect set over the band. It's more reliable and doesn't even require you to open the suspect set.

V1 feeds 1st IF transformer T1's tuned, untapped primary. Its untuned, untapped secondary feeds the IF signal to the base of 1st IF amplifier V2, a 2N146. V2 is biased by the combination of an 18kΩ resistor R5 and the 1.5kΩ resistor R13 connected to the anode of the demodulator diode, E3.

This negative-going rectified output from E2 forms the AGC circuit. With increasing signal pickup, V2's bias will decrease, reducing its collector current.

As collector current falls, the drop across the 2.2kΩ resistor R7 will fall, and the DC collector voltage will rise. This increase in voltage also appears at the anode of E2, the AGC extension diode.

E2's cathode connects into the converter's collector and E2 coming into conduction will partly shunt out the IF signal at the converter's collector.

This action greatly increases the range of AGC control. Without it, reduction of V2's bias can only give an AGC range of some 30dB.

V2's collector feeds the tapped, tuned primary of 2nd IF transformer T2. Its secondary feeds the base of 2nd IF amplifier V3, another 2N146. This works with fixed bias. Neither IF amplifier uses neutralisation and the set is stable without it.

Both IF amplifiers use bypassing back to their emitters rather than to ground. It's a method more often used in VHF designs and it no doubt comes from Motorola's extensive experience in RF circuitry.

V3 feeds the 3rd IF transformer T3's tapped, tuned primary, and T3's secondary feeds the demodulator diode E3. After IF filtering by 40nF capacitor C13, recovered audio is fed to the volume control. Audio filtering is performed by 6µF capacitor C8.

Audio stages

As already mentioned, the entire audio section uses PNP transistors. Driver V4, a 2N185, uses conventional combination biasing. Its collector connects to the phase-splitter transformer T4 to provide out-of-phase signals to the 2N185 output transistors V5 and V6 which form the push-pull Class-B output stage.

The usual amount of forward bias (about 0.12V) is provided by resistive divider R17 & R18. Output transformer T5, shunted by top cut capacitor C17, combines the output transistor collector currents and delivers output either to the internal 13Ω speaker or to an earphone via the earphone socket on the rear case shell.

Getting it going

This process started with the follow-

ing steps: insert batteries; close case; switch on; be disappointed.

It's a pretty common story but one with a happier ending than many others.

Plugging in an external speaker rewarded me with sound, confirming nothing more problematic than an oxidised earphone socket. Then there was more disappointment. Sound from the set slowly faded to nothing. Turn off, turn on; the same thing happened.

My local oscillator test showed that the oscillator was dead. Great. A 60-year-old NPN germanium transistor is crook. I put the set aside for the time being.

That time finally ended and I thought I'd give this set another try. Let's say I was surprised that this time it just worked, with no weird fading or loss of signal.

I had been hoping the fault was in E1, the local oscillator limiter diode – at least a faulty germanium diode could be replaced easily. But with the set now working, even that simple plan was no longer necessary.

After the initial surprise, I put the radio on the test bench and checked it over. The alignment guide puts the low end of the tuning range at 530kHz. This implies that you can adjust the antenna tuned circuit to match. In practice, unless you can slide the antenna coil along the ferrite rod, the optimal adjustment is done at 600kHz.

To adjust, set the dial to 600kHz and radiate a 600kHz signal. Now, oscillator adjustment should give maximum output. To check, screw the oscillator slug in slightly, readjust the generator and check the output.

If it has increased, continue with small adjustments of the oscillator coil until you get maximum output. If screwing the slug in reduced the output, try bringing it out a bit. Again, if there's an improvement, continue until you reach maximum output.

Special handling

The service instructions advise that the 66T1 be aligned in its case. This works fine for the local oscillator slugs and the three IFs, but the local oscillator and antenna trimmers are obscured. A paperclip with a flattened end is recommended, as the photograph shows. Yes, it is fiddly.

Removal and replacement of parts in the radio is a bit tricky: the volume knob pulls off, but the tuning dial is held by a central knurled screw. Removing the knob exposes a Philips head screw to remove.

The service manual recommends doing alignment with the PCB in the case. This means you'll need a piece of taut wire or a paperclip bent at 90° to adjust the tuning gang's antenna and oscillator trimmer.

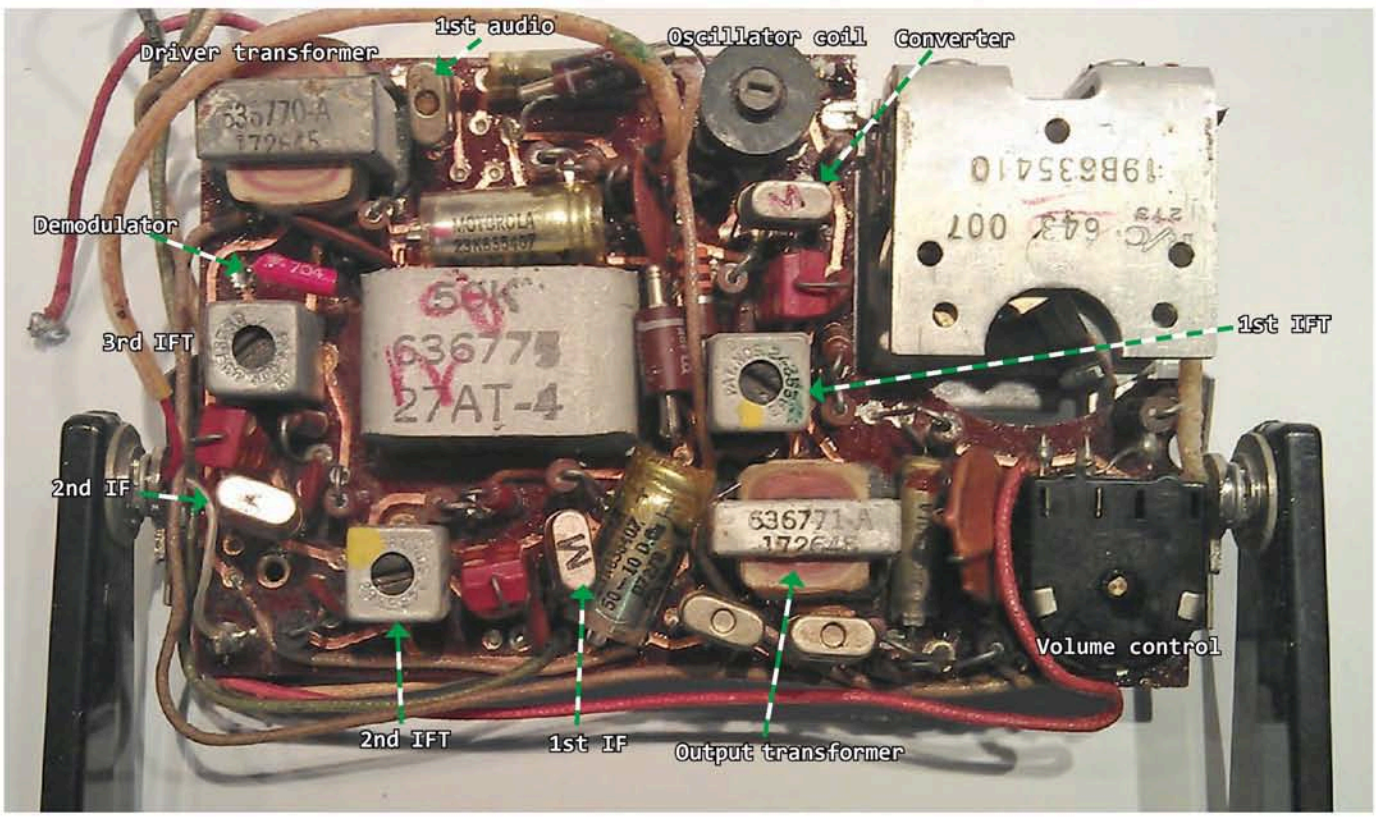

While the PCB in the radio is double-sided, components are only soldered to one side.

Now, turn the carrying handle backwards at 90° to the case. You may need to slightly compress the case lengthwise to allow the handle's pivots to clear the case slots and draw out.

So far, so good. I took it outside to pick up a few local stations and was successful, so I returned it to the test bench. Next day it would not give a peep. The speaker was open-circuit.

Great. Where was I going to get a 3-inch, 13Ω speaker? Careful probing showed there was a break in one of the braids that connects between the speaker's basket terminal and the voice coil. Careful resoldering restored the connection and allowed the speaker to work again, thankfully.

The battery carrier, made of black plastic, had suffered over time and one corner had broken so that it failed to hold the batteries tightly enough to make contact.

Attempts to glue it together were unsuccessful, so I used a cable tie to strap it. Plastic cable ties aren't very good for making sharp angles, but a stainless steel tie (left over from irrigation work) worked just fine.

Performance

So how good is it? It's OK without being outstanding. Starting with the RF performance, for 50mW output, it needs some 1mV/m at 600kHz and 1.9mV/m at 1400kHz. Selectivity at -3dB down was ±2kHz and at -60dB down it was ±45kHz.

This performance mirrors the previously-described GE675 which also featured an unusually small ferrite rod antenna. Outside, it did manage to bring in ABC Western Victoria at Horsham but it needed the volume control "well advanced" for comfortable listening.

Its AGC performance was a bit puzzling. The circuit includes E2, an AGC extension diode. Other sets with this design easily exceed 45dB gain control for 6dB output rise but this set's AGC action was minimal at best. As the circuit voltages for V2 show, strong signals did bring extension diode E2 into play.

I suspect that the poor AGC action is due to the low resistance values in V2's bias network: in series, they supply diode E2 with some 270µA of forward bias. To provide any AGC action, there has to be enough rectified signal to counteract this current and it's considerably more than in other sets whose designs deliver much better AGC action, with circuit currents as little as one-fifth.

It's possible that the low values of bias dividers for the two IF amplifiers were over-designed to accommodate the wide production spreads of first-generation grown-junction transistors.

At 50mW output, total harmonic distortion (THD) was 3.7%, and only 1.5% at 10mW output, pretty good for a "first-generation" portable. It went into clipping around 90mW, hitting 10% THD at 110mW output. At half battery voltage, it clipped at 20mW, reaching 10% THD at 30mW.

Frequency response from volume control to speaker was 110kHz~7.5kHz, and from antenna to speaker it was 180Hz~2kHz.

Would I buy another?

You can still find 66T1s around and they're respectable members of the "first wave" of portable transistor sets. It was also good to get a 56T1, just to be able to compare the two audio designs.

My only quibble with the 66T1 is the noticeable "hand effect" that detunes the antenna circuit, reducing signal pickup if you use the antenna as a handle.

Further Reading:

For the circuit and servicing instructions, go to Radiomuseum: siliconchip.com.au/link/aajt

For a collector's description, and illustrations, try Phil's Old Radios at antiqueradio.org/Motorola66T1.htm

A general discussion, including "it's a bit deaf" can be seen at siliconchip.com.au/link/aaju SC

BACK TO THE FUTURE

Many years ago, long before the days of smartphones and computers, even before the days of television, it was considered a "rite of passage" for dads to sit down with the sons (or daughters) and help them as they built their own radio receiver. FM? Not on your life - no such thing! DAB+? Hadn't been invented yet! No, it was all good, old reliable AM Radio. And they could listen to stations hundreds, perhaps thousands of miles away! The beauty of it all was that they were building something that actually worked, something they'd be proud to show.

Enjoy those days once again as they build the SILICON CHIP Super-7 AM Radio

See the articles in November & December 2017 SILICON CHIP (www.siliconchip.com.au/series/321)

- Covers the entire AM radio broadcast band.
- Has on-board speaker ... or use with headphones.
- SAFE! –power from on-board battery or mains plug-pack
- Everything is built on a single, glossy black PCB.
- All components readily available from normal parts suppliers
- Full instructions in the articles including alignment.
- See-through case available to really finish it off!

PRODUCT SHOWCASE

Custom-manufactured rechargeable lithium batteries

Premier Batteries specialise in the custom manufacture of rechargeable lithium batteries; both lithium-ion and lithium-iron-phosphate.

Shown at right is a recent development: a 120V DC, 14Ah lithium ion battery in a small portable plastic case. This battery, designed to supply up to 20 amps, weighs only 8.5kg and replaces 10 sealed-lead-acid batteries weighing 43kg. It is easy to carry and fully charges in 5 hours.

Manufactured with high-capacity Sanyo cells, it is complete with protection circuit and charger.

The high power and light weight of lithium batteries has opened up many new opportunities for engineering designers and the demand for lithium batteries has increased substantially in recent years. They are often difficult to import so local custom manufacture fills a vital and increasing need.

Contact:
Premier Batteries Pty Ltd
9/15 Childs Rd Chipping Norton 2170
Tel: (02) 9755 1845
Web: www.premierbatteries.com.au

MDO vs. Swept Tuned Spectrum Analyser

Nowadays, with congestion in the spectrum, the traditional swept-tuned analyser is incapable of capturing all the different types of signal, such as wideband and transient.

With the introduction of the Mixed Domain Oscilloscope, you can now have exceptional real-time wideband capture up to 3GHz, correlation to any analog waveform or digital bus transactions giving you a better insight on what is causing the failure (see reviews in Nov11 and May14 issues).

Tektronix 6-in-1 Mixed Domain Oscilloscope MDO has integrated a real hardware-based Vector Signal Analyser (VSA) to offer real-time time and frequency domains signal correlations that no other type of instrument can.

It offers up to 3GHz real-time spectral analysis capture bandwidth at -149dBm/Hz DANL together with 1GHz time-domain analog, digital signals capture at 5GS/s.

Contact:
Tektronix Southeast Asia Pte Ltd
1 Clementi Loop #06-02 | Singapore 129808
Tel (Aust No): 1800-709-465
Web: https://www.tek.com/

New RHT-Climate from Novus Automation

With a wide backlight display and distinctive design, the RHT-Climate is a humidity and temperature transmitter that provides accurate measurements of ambient temperature ±0.2°C (0°C to +60°C) and humidity ±1.8%. It calculates in real time seven psychrometric properties:

• Dew Point Temperature • Wet Bulb Temperature • Absolute Humidity • Frost Point Temperature • Specific Enthalpy • Partial Vapor Pressure • Mixing Ratio

All variables are available by current (4-20mA) or voltage (0-10V) output signals or by RS485 Modbus RTU communication.

The RHT-Climate also has two digital outputs and one embedded buzzer. The digital outputs can be used as alarms or to control heating/cooling and drying/humidifying equipment.

NXperience software and USB connection allow the analog outputs to be modified.

Therefore, simulations of temperature and humidity change can be carried out during commissioning of your PLC, BAS or SCADA system.

Contact:
Ocean Controls
44 Frankston Gardens Dve,
Carrum Downs, Vic 3201
Tel: (03) 9708 3290
Website: oceancontrols.com.au

ElectronEX Returns to Sydney; September 5&6

ElectronEX electronics design & assembly expo
Rosehill Gardens - Sydney
5-6 September 2018

Australia's only dedicated trade event for the electronics industry will this year be held in Sydney.

The expo is now in its 9th year and alternates annually between Sydney and Melbourne.

With over 90 exhibitors and a technical conference plus free seminars featuring leading international and local industry experts, this is a must-see event for decision makers, enthusiasts and engineers designing or working with electronics.

Attendees can pre-register for free at www.electronex.com.au

This year's event will feature a host of new product releases as well as advanced manufacturing solutions, as Australian companies embrace the move towards niche and specialised manufacturing applications.

2016 Electronex Sydney attracted over 1200 electronics design professionals, including electronic and electrical engineers, technicians and management, along with IT and communications professionals, defence, government and service techs.

For further information, contact:
Noel Gray, Australasian Exhibitions and Events Pty Ltd Tel: 03 96762133
Email: ngray@auexhibitions.com.au

ASK SILICON CHIP

Got a technical problem? Can't understand a piece of jargon or some technical principle? Drop us a line and we'll answer your question. Send your email to silicon@siliconchip.com.au

LCD problem with Deep Cycle Battery Charger

In 2005, I built the Deep-Cycle 12V Battery Charger project that was described in the November and December 2004 issues (siliconchip.com.au/Series/102). It performed well until recently when it let some smoke out and required a rebuild. During this rebuild, I changed the display from the Altronics unit I used originally to the Jaycar LCD module.

When testing the completed unit, I found spurious characters on the display, no matter what function was selected. I tested again using the Altronics LCD and it worked OK. All characters were displayed correctly. I replaced the Jaycar display with a new one but found exactly the same result. I checked all the connections and there are no shorts or open circuits from the PIC to the LCD.

Do you know why I am getting gibberish on the Jaycar LCD? Your help would be greatly appreciated. (J. S., Avondale, Qld)

● Try a capacitor of around 100pF between pin 6 (Enable) and pin 2 (0V) on the LCD. There may be a timing problem with that display regarding the sequencing of data and the enable pulse.

Note: the reader subsequently contacted us to confirm that adding a 47pF capacitor between these pins solved the problem; 100pF proved to be slightly too high a value for correct operation.

Plywood thickness for horn speaker

I would really like to build the horn-loaded speaker featured in the October 2013 issue (siliconchip.com.au/Article/499) but it is impossible to buy 15mm plywood. I didn't really understand how the article says to buy an Imperial size sheet with a metric size thickness.

I was thinking of using a 16mm thick sheet and adjusting the size of the box to suit, ie, keeping all the internal dimensions the same. I figured so long as the internal dimensions of the horn are the same it should be OK. Is this right? (R. C., via email)

● That approach will certainly work and the result is a surprisingly good, compact speaker.

Arduino bug affects LC Meter software

I built the latest LC Meter from SILICON CHIP, June 2018 (siliconchip.com.au/Article/11099) and the hardware looks fantastic but when I tried to compile the Arduino Sketch, I got an error. The error message is of the form "readlink <filename>.ino: The system cannot find the file".

I have made sure that I have all the required libraries installed and to date, I have had good success using the IDE but this one has me stumped. Can you help? (T. J. M., Bathurst, NSW)

● It appears this is actually a bug with the Arduino IDE which means that it can't handle sketch files stored on OneDrive. You can find more information on this error at the following links:

http://forum.arduino.cc/index.php?topic=509222

https://github.com/arduino/arduino-builder/issues/254

Two workarounds exist at the moment. You can either copy the sketch folder outside OneDrive and compile the copy (which should work in all cases) or alternatively, un-check the "Files On-Demand" settings in OneDrive.

Using an external crystal with PIC16F88

My query is on the basic operation of the PIC16F88. With a 20MHz crystal connected between pin 15 (OSC2) and pin 16 (OSC1) and two 27pF ceramic disc capacitors connected from each end of the crystal to 0V (V_{SS}) and pin 14 (V_{DD}) connected to +5V, should the clock oscillator free-run at 20MHz? I have found it doesn't; it appears it's not quite as simple as that.

The only other connection to the micro is a 10kΩ resistor from pin 4 ($\overline{MCLR}$/RA5) to V_{DD}. I am trying to build the Temperature/Humidity Display from the Circuit Notebook section in the April 2018 issue (siliconchip.com.au/Article/11035). (R. S., via email)

● For the PIC16F88 to work with an external 20MHz crystal, the microcontroller must be programmed to configure the oscillator in high-speed mode (HS_OSC).

If the microcontroller is not programmed for the external oscillator then it will run using the internal oscillator. The configuration would be, for example (using MPASM):

```
;Configuration Register 1
 __CONFIG _CONFIG1, _CP_ALL
  & _CCP1_RB1 & _DEBUG_
  OFF & _WRT_PROTECT_OFF
  & _CPD_OFF & _LVP_OFF &
  _BODEN_OFF & _MCLR_ON &
  _PWRTE_ON & _WDT_OFF &
  _HS_OSC
;Configuration Register 2
 __CONFIG _CONFIG2, _IESO_
  OFF & _FCMEN_OFF
```

Wide-Range LC Meter questions

The new Wide-Range LC meter looks like a winner. I have ordered the specialised parts from the SILICON CHIP Online Shop but I need to know whether I can use a Freetronics Eleven board in place of the Arduino Uno.

I am also having problems sourcing some of the other parts. Firstly, Jaycar only sells ½W metal film 1% resistors. Will they fit? Also, I don't know what parts to order for CON1, CON5, CON4 and JP1.

Finally, regarding the 10µF 6.3V tantalum capacitors, Jaycar only have 10µF 16V types. Will they fit? (A. F., Salamander Bay, NSW)

● In reply to your question about the Freetronics Eleven, you would need to be sure that it is the R3 pinout version, ie, the one that has a 10-pin header for D8-D13, GND, AREF, SDA and SCL.

Signal Generator output wrong at certain frequencies

I have put together an ADF4351 PLL module together with a Micromite BackPack, as described in the May 2018 issue (siliconchip.com.au/Article/11073) and in general am very happy with the results.

However, I am measuring a lot of spurious signals around a frequency that I am particularly interested in; 1694.1MHz which is the new GOES 17 Meteorological satellite HRIT transmission frequency. Output at 1691.000MHz (which is the GOES 15 LRIT frequency) is OK.

I am wondering if it is a problem with the PLL board that I have or if it is a more general issue. I note at other frequencies, say at 1691MHz, the output looks quite clean but around 1694-1696MHz there are a lot of spikes and the carrier is off-frequency. The following is a table of my carrier measurements:

Programmed Freq	Measured Freq
1400	1400
1407	1408.6
1499	1496.5
1500	1500
1501	1501
1693	1693
1694	1697
1696	1693.7

I like the ADF4351-based Signal Generator as it will be ideal for use in the field when we start deploying systems. My primary generator at these frequencies is an old HP 8614A which is still good but a real boat anchor. So I am sure that the problem is not with my measurements.

I have a good GPS-derived standard to check at 10MHz steps but used a spectrum analyser for the above measurements which are accurate to approximately ±0.5MHz or so. Unfortunately, I don't have a frequency counter which will work at these frequencies.

I see the same results with a Nooelec Wide Range USB SDR receiver which is where I first noticed the problem at 1694.1MHz.

As a matter of interest, I am currently working with the University of Colorado, building a reliable but cheap early warning system for tsunamis, earthquakes, cyclones, volcanic ash etc.

This is for the Pacific Islands using the US Weather Service EMWIN data transmission (which I helped develop quite a few years ago.)

Our aim is to use SDR modules with specialised software for this; it's much cheaper than the dedicated professional receivers we have been using in the past.

Many thanks for great hints on using the cheap modules. I have used quite a few from Banggood with good results. I will be adding the digital attenuator boards for adjustable levels from the Signal Generator. (C. S., via email)

- We think the problem you describe is probably a general one associated with the ADF4351 fractional-N PLL, rather than some kind of fault with your particular module. That's because you have found it associated with specific output frequencies (like 1694.1MHz), while it is apparently not present at other frequencies nearby.

It's interesting to note that both of the frequencies you tested which are an integer multiple of the reference oscillator (1400MHz and 1500MHz) appear to be spot-on.

There is usually more than one combination of settings which allows you to produce the same output frequency using this sort of complex PLL system.

We would be tempted to try alternative settings to produce the problem frequencies. If this solves it or changes the spurious frequencies, then that strongly suggests it's a fundamental problem with the PLL itself.

There's also the problem that the RC loop filter provided with the module is by necessity a "one size fits all" affair but it's unlikely to provide the best performance across the entire range of possible output frequencies.

So we suggest you try tweaking the values of the RC loop filter components connected between pins 7, 20 and 5 of the ADF4351.

Finally, it is possible that there is a hidden maths error in the Micromite program (adapted from the Arduino program), although this was checked pretty carefully.

Some older versions of the Eleven (and probably other Uno clones) only have an 8-pin header, omitting SDA and SCL, which are needed in this project to connect to the LCD screen.

In short, confirm that the board has the R3 pinout. If it does, it should work.

We used the Jaycar metal film resistors (actually 0.6W, we believe) in our build of the project, so they should be fine. These are the same size as traditional ¼W resistors and can be used in all our projects unless we specifically require sub-miniature resistors, a power rating above 0.6W or a closer tolerance than 1%.

CON1, CON4 and CON5 are female headers. The closest alternatives are Jaycar HM3230 or Altronics P5390, although these may need to be cut down to suit.

The tantalum capacitors we used in our prototype are 16V, so you should have no problem fitting 16V tantalums.

Frequency Switch is glitching with fan

I recently modified my 42 year-old Toyota Corolla by removing the viscous-clutch coupled cooling fan and fitting a Toyota Echo radiator with a thermo-fan.

The system works great as I fitted a thermo-switch above the thermostat with a switch-on threshold of 95°C and switch-off of 92°C. This is above the normal operating range of the Hi Flow thermostat, which regulates coolant temperature between 82-87°C. This released a few horsepower that had been previously absorbed by the mechanically driven fan. Gratefully accepted!

Logging the temperatures at several points in the coolant system and the thermo-fan operation indicates the fan is rarely used. The only time it is really required is in stop-start traffic or at very long stop lights. In that case, the thermo-switch comes on when the coolant hits 95°C.

I thought it would be nice to preempt this condition and start the fan automatically when the car speed was reduced whilst the engine was running, rather than wait until the

Software for circuit diagrams

I have always been impressed with the circuit diagram drawing software that you use in your magazine articles. What is the name of it and is it available for readers to download?

I have tried LTspice but it is too hard for my feeble brain. I am more concerned with easy component placement and wiring rather than circuit simulation. Is there a good freeware package you could recommend? (C. O., via email)

● The drawing package we use is CorelDRAW and over the years we have developed a very extensive component library which streamlines the process of process of producing the many diagrams we do each month.

However, CorelDRAW is not a cheap package to own and our library is copyright so that is probably no help at all. You could try using a free ECAD package such as Electric at www.gnu.org/software/electric/ or Open Circuit Design at http://opencircuitdesign.com/

Have a look at them and see what you think.

coolant reaches 95°C. So I built your Deluxe Frequency Switch project from the May 2018 issue (siliconchip.com.au/Article/11062).

I purchased the PCB and programmed micro from SILICON CHIP and had it running on the bench perfectly, fed from my bench signal generator. I fitted a Hall Effect Sensor (OH090U) to one of the front wheels, sensing a small rare-earth magnet fitted into one of the bolts holding the disc to the hub.

The wiring back to the dash area is a 3-wire screened, Teflon-coated cable. The OH090U has an 820Ω pull-up resistor on its output to the 5V rail on the Frequency Switch. Testing on the car, with a CRO, indicates a very clean square wave with 5V peak-to-peak.

I calculated the speeds I wanted the switch to pull in at and the hysteresis required. It worked out to 4Hz (27km/h) and 7Hz (47km/h). I inserted JP1 and set the Frequency Switch up on the bench, using the two separate frequency thresholds. I fitted it to the car and it worked straight away, at speeds very close to those I had nominated.

But a problem arose when I stopped. Sometimes the switch/relay would stay activated but at other times, the switch/relay would drop out. When it drops out, this prevents the thermo-fan from running whilst stopped at the lights.

The switching off whilst stopped is quite intermittent. At first, it appeared to happen when I put my foot on the brake, so I thought it might be a supply voltage issue. I decoupled the Frequency Switch a bit more by increasing the size of the electrolytic directly after D1. However, this did not improve the situation.

I note that the specification for the Frequency Switch input signal range is 1Hz-10kHz. I don't know what the code does when the signal frequency drops below 1Hz so I thought I'd better ask.

I also tried powering the whole circuit from a 12V 9Ah gel cell battery sitting on the floor of the car, totally isolating the Frequency Switch from the car's 12V system, except for the ground/chassis connection.

To my surprise, it then worked perfectly. I drove for about 30 minutes and stopped numerous times and not once did the switch drop out. I am quite baffled. Any thoughts on possible solutions would be very much appreciated. (K. B., Greenbank, Qld)

● John Clarke installed an electric fan on a Holden Gemini a long time ago and found that it did liberate a few horses and also the made the engine quieter. However, it was not as sophisticated as what you have done.

The Frequency Switch will keep the relay on with no input signal (ie, zero hertz) when set to switch on with a falling frequency. So even if the frequency drops to zero, the relay should stay on.

It seems that the vehicle's 12V power is not clean and this is causing the problem. Maybe it has large transients or voltage drops. You may need an RC low-pass filter for the supply to the Frequency Switch.

Try connecting a 47Ω 5W resistor in series with the 12V supply rail to the Frequency Switch and increase the on-board decoupling capacitor to as large a value as you can fit.

Supply noise could be causing pulses from the Hall Effect switch even when stopped. You may need to add an RC filter to the Hall Effect unit power supply to solve this.

You could use a 470Ω ½W series resistor and 100µF bypass capacitor. Or the Hall effect sensor could instead be powered from the regulated 5V supply from the Frequency Switch board.

Note that the ground connection for the Hall Effect device should be connected directly to the ground (0V) input on the frequency switch.

Clock battery life with NTP time source

I refer to the "Clayton's" GPS Time Source project in the April 2018 issue (siliconchip.com.au/Article/11039).

I want to know about the power consumption when the ESP8266 D1 Mini Module is used with the GPS-synchronised Analog Clock Driver project from February 2017 (siliconchip.com.au/Article/10527), ie, when the new module is substituted for the GPS receiver.

The second-last paragraph on page 60 of the April 2018 issue states: "By default, we perform an NTP update at hourly intervals." The features and specifications box on page 28 of the February 2017 Clock article states the time is synchronised every 44 hours.

Although the Features and Specifications box on page 60 of the April 2018 issue shows a current consumption of approximately 70mA for the WiFi module, I don't know the duty cycle as no mention is made of the power impact, so I'm unable to determine if the expected battery life with the WiFi module is similar or different to that for the GPS module.

Specifically, I refer to the Calculating Battery Life box on page 38 of the February 2017 article. It shows the expected battery life using AA alkaline cells of 2400mA capacity as 21 months.

So I would like to know the expected battery life of the Analog Clock when the ESP8266 D1 Mini Module is used as described in the Clayton's Time Source project. Thank you for another most interesting and useful project. (G. D., Bunyip, Vic)

● While the NTP time is updated at

hourly intervals by the ESP8266, since the analog clock driver only powers it up briefly once every 44 hours, it will not get a chance to do a second NTP query. So the interval between updates will still be 44 hours.

Normally, the ESP8266 is able to get the time (via NTP) more quickly than a GPS module will find the satellites. So we expect the average power consumption with the ESP8266 module to be lower than with a GPS receiver.

But in reality, it will vary depending on a number of factors such as how good your GPS reception is, what your WiFi network latency is and so on.

Changing delay in Voice Operated Relay

I've recently purchased a "Voice Operated Relay" VOX kit from Altronics, Cat K5543 (July 2011; siliconchip.com.au/Article/1101).

I plan to use this to switch fans on and off inside a timber enclosure which houses a compressor (to dampen the noise). The fans are fitted to the box so that the compressor doesn't overheat. The microphone will be inside the box.

Obviously, the compressor is very loud, so the microphone doesn't need to be very sensitive.

What I'd like to know is whether any modifications need to be made so the microphone and input into the amp aren't damaged by overload. Is there a more suitable type of microphone to use in this case, maybe a dynamic mic which isn't as sensitive?

Also, I'd like to increase the delay time to at least 30 seconds or maybe even a minute. How can I do that? (B. W., Melbourne, Vic)

● The microphone and circuitry will not be damaged due to the compressor noise. You can reduce sensitivity by wrapping the microphone in some bubble wrap or similar to reduce sound pressure.

The delay period can be extended from a maximum of 10 seconds to 30 seconds by changing the 100µF capacitor in the delay circuitry. Using a 470µF value (16V) will give approximately 50 seconds of maximum delay, adjustable down to half a second using VR2.

Battery Balancer with two 6V AGM batteries

I was reading the article on your Battery Balancer in the May 2018 issue (siliconchip.com.au/Article/11068). Would this work for two 6V batteries in series and would it be needed on a pair of 6V AGM deep cycle batteries?

I have a 30A charger so I assume from the comments in the article that I would need three balancers to cope with this current. (P. C., Hobart, Tas)

● As stated in the article, the minimum operating battery voltage of that design is 5V so yes, it should work with 6V batteries.

Flooded-cell lead-acid batteries are usually balanced by periodic brief over-charging, to around 2.6V/cell (an "equalisation charge"). Apparently, most AGM batteries do not tolerate this, so all you can do to keep the cells balanced is to charge them up to the maximum specified voltage and hold them there for some time (ie, a long full charge).

Therefore, it would be a good idea to use our balancer to balance the two batteries as there is little you can do to keep the cells within each battery balanced.

The cells within each battery are likely to be better matched (in terms of capacity) than the cells between the two batteries, so an inter-battery im-

Radio, Television & Hobbies: the COMPLETE archive on DVD

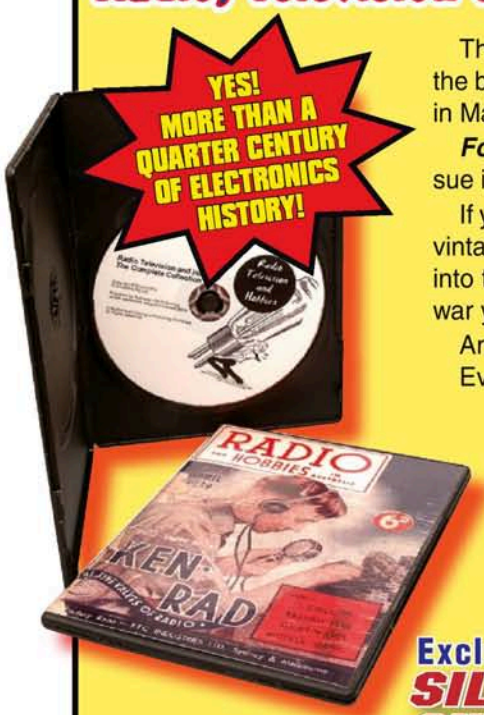

This remarkable collection of PDFs ***covers every issue*** of R & H, as it was known from the beginning (April 1939 – price sixpence!) right through to the final edition of R, TV & H in March 1965, before it disappeared forever with the change of name to EA.

For the first time ever, complete and in one handy DVD, every article and every issue is covered.

If you're an old timer (or even young timer!) into vintage radio, it doesn't get much more vintage than this. If you're a student of history, this archive gives an extraordinary insight into the amazing breakthroughs made in radio and electronics technology following the war years.

And speaking of the war years, R & H had some of the best propaganda imaginable!

Even if you're just an electronics dabbler, there's something here to interest you.

- Every issue individually archived, by month and year
- Complete with index for each year
- A must-have for everyone interested in electronics

ONLY $62.00 +$10.00 P&P

Exclusive to: SILICON CHIP

Order now from www.siliconchip.com.au/Shop/3 or call (02) 9939 3295 and quote your credit card number.

balance is likely to develop faster than inter-cell imbalance and our balancer will compensate for that.

But you could still check the data sheet for the particular model that you have and see if they will withstand equalisation. If so, check if your charger has that capability.

Assuming they will withstand it, you can use the charger to equalise the batteries even if our balancer is attached. It won't interfere.

GPS Analog Clock not working from NTP

Thanks for the great magazine. It keeps me occupied for the whole month.

I am having a problem with the Clayton's GPS Time Source unit published in the April 2018 issue (siliconchip.com.au/Article/11039) and I hope you can help me sort it out. I originally made the GPS-synchronised Analog Clock from February 2017 issue (siliconchip.com.au/Article/10527) and it worked well in my workroom but it would not work in the desired location inside the house due to poor GPS signal.

So I shelved the project until now and seeing the Clayton's article, I thought that this would solve my problem. I successfully programmed both a WeMos D1 Mini Pro and an ESP-01 with the software and both locked onto my WiFi network and it gave an NMEA data output just like shown in the article.

However, when I connected either of the above devices to my GPS Synchronous Clock board, the initialisation process did not fully complete. The one, two and three flash sequence was quickly obtained but the final stage involving four flashes was never reached.

The clock board should be OK because it worked earlier with a genuine GPS receiver. The modules work because I can see the correct output on the Arduino serial input.

Could there be some incompatibility in the outputs from the WeMos devices and a true GPS receiver? I have downloaded and installed the latest software for the PIC16F88 on the GPS-Synchronised Clock board.

I would certainly appreciate your views on this problem. (J. H., Nathan, Qld)

- That the clock is not showing the four flashes suggests that the modules are not able to get a valid NTP time from the servers. The clue as to where that is failing will be in the module's serial output. We suggest you check that the module is getting a valid IP address and that the serial output contains valid time data.

It may be that the modules are connecting to your WiFi network but are not able to reach the NTP servers for some reason. You could try an alterna-

Running Universal Motor Speed Controller from 110VAC

I want to adapt your Full Wave 230VAC Universal Motor Speed Controller from the March 2018 issue (siliconchip.com.au/Article/10998) to run from a 110VAC mains supply. I have an idea of which components may need to be changed but would like to run it past you.

The reason that I want to do this is that I have a milling machine with a powered X feed via an ASONG AS-235. This uses a very basic half-wave speed control and has poor low-speed control. I've been looking for some time for a replacement speed controller and I think the aforementioned controller would be a suitable candidate.

I modelled the power supply using LTspice and it appears to give a 4.95V supply with 400mV of ripple and 32mA of circulating current. Loading it to give a 5% voltage drop (ie, 4.7V) requires drawing 15mA, giving 600mV of ripple and 32mA of circulating current.

Does this seem correct? I am planning on modelling the circuit with a 110VAC input while changing the value of the X2 capacitor to achieve the required supply voltage and load current.

Also, I experimented with moving the connection of the 47Ω resistor feeding the A1 terminal of TRIAC1 to the cathode of ZD1.

This seems to lower the supply ripple by an order of magnitude, down to about 40mV peak-to-peak. The voltage at this point appears to be about 15% above the 5V supply (ie, 5.4V). What do you think of this modification?

Regarding the current measurement portion of the circuit, I measured the full-load power consumption of the target motor at approximately 130W. With a 110VAC mains supply, taking some losses into account, that gives a full-load motor current of approximately 1.3A.

Will this circuit still give good low-speed control at these low current levels? Or should I consider a different current transformer ratio?

Finally, given the 110VAC supply, should I reduce the value of 330kΩ resistor to say 160kΩ? (B. P., Murrumbateman, NSW)

- The supply load for this design varies. We simulated it as a 5mA constant load and a pulsed load. So the normal supply voltage is higher than suggested by your simulation, which used a constant load resistance.

Ripple will be lower if the simulated current is reduced so changing the connection of the 47Ω resistor would not be needed.

We don't suggest you change this as the 47Ω resistor was required to prevent the microcontroller from latching up due to supply voltage spikes and we are not sure whether that problem would return if you change the circuit configuration.

The 330kΩ value should be left as is; if you did change it, you would also need to change the phase shift compensation value in the software.

For current feedback, you may need to experiment but you can always change the number of times that the Active conductor passes through the sense transformer core. That's easy enough to do once you have built the unit, as long as you leave the wire sufficiently long.

More turns would make sense for use with a small motor but keep in mind that for the same power rating, a motor running at 110VAC would draw twice the current compared to at 230VAC, so you may need fewer turns (ie, one rather than two).

You would probably need a 1µF X2-class capacitor for a 110VAC supply, compared to 470nF for the 230VAC supply version.

SILICON CHIP.com.au/shop ONLINESHOP

PCBs and other hard-to-get components now available direct from the Silicon Chip Online Shop

NOTE: Not all PCBs are shown here due to space limits but the Silicon Chip OnlineShop has various boards going back to 1992. For a complete list of available PCBs, back issues etc, go to siliconchip.com.au/shop **PRICES ARE PCBS ONLY.**

STATIONMASTER TRAIN CONTROLLER	MAR 2017	09103171/2	$15.00/set
EFUSE	APR 2017	04102171	$7.50
6GHz+ 1000:1 PRESCALER	MAY 2017	04112162	$7.50
MICROBRIDGE	MAY 2017	24104171	$2.50
MICROMITE LCD BACKPACK V2	MAY 2017	07104171	$7.50
10-OCTAVE STEREO GRAPHIC EQUALISER PCB	JUN 2017	01105171	$12.50
10-OCTAVE STEREO GRAPHIC EQUALISER FRONT PANEL	JUN 2017	01105172	$15.00
10-OCTAVE STEREO GRAPHIC EQUALISER CASE PIECES	JUN 2017	SC4281	$15.00
RAPIDBRAKE	JUL 2017	05105171	$10.00
DELUXE EFUSE	AUG 2017	18106171	$15.00
DELUXE EFUSE UB1 LID	AUG 2017	SC4316	$5.00
MAINS SUPPLY FOR BATTERY VALVES (INC. PANELS)	AUG 2017	18108171-4	$25.00
3-WAY ADJUSTABLE ACTIVE CROSSOVER	SEPT 2017	01108171	$20.00
3-WAY ADJUSTABLE ACTIVE CROSSOVER PANELS	SEPT 2017	01108172/3	$20.00/pair
3-WAY ADJUSTABLE ACTIVE CROSSOVER CASE PIECES	SEPT 2017	SC4403	$10.00
6GHz+ TOUCHSCREEN FREQUENCY COUNTER	OCT 2017	04110171	$10.00
KELVIN THE CRICKET	OCT 2017	08109171	$10.00
6GHz+ FREQUENCY COUNTER CASE PIECES (SET)	DEC 2017	SC4444	$15.00
SUPER-7 SUPERHET AM RADIO PCB	DEC 2017	06111171	$25.00
SUPER-7 SUPERHET AM RADIO CASE PIECES	DEC 2017	SC4464	$25.00
THEREMIN	JAN 2018	23112171	$12.50
PROPORTIONAL FAN SPEED CONTROLLER	JAN 2018	05111171	$2.50
WATER TANK LEVEL METER (INCLUDING HEADERS)	FEB 2018	21110171	$7.50
10-LED BARAGRAPH	FEB 2018	04101181	$7.50
10-LED BARAGRAPH SIGNAL PROCESSING	FEB 2018	04101182	$5.00
TRIAC-BASED MAINS MOTOR SPEED CONTROLLER	MAR 2018	10102181	$10.00
VINTAGE TV A/V MODULATOR	MAR 2018	02104181	$7.50
AM RADIO TRANSMITTER	MAR 2018	06101181	$7.50
HEATER CONTROLLER	APR 2018	10104181	$10.00
DELUXE FREQUENCY SWITCH	MAY 2018	05104181	$7.50
USB PORT PROTECTOR	MAY 2018	07105181	$2.50
2 x 12V BATTERY BALANCER	MAY 2018	14106181	$2.50
USB FLEXITIMER	JUNE 2018	19106181	$7.50
WIDE-RANGE LC METER	JUNE 2018	04106181	$5.00
WIDE-RANGE LC METER CLEAR CASE PIECES	JUNE 2018	SC4609	$7.50
TEMPERATURE SWITCH MK2	JUNE 2018	05105181	$7.50
LiFePO4 UPS CONTROL SHIELD	JUNE 2018	11106181	$5.00
NEW-THIS-MONTH			
RASPBERRY PI TOUCHSCREEN ADAPTOR (TIDE CLOCK)	JULY 2018	24108181	$5.00
RECURRING EVENT REMINDER	JULY 2018	19107181	$5.00

Prices above are for the Printed Circuit Board ONLY – NO COMPONENTS OR INSTRUCTIONS ETC ARE INCLUDED! P&P for PCBS (within Australia): $10 per order (ie, any number)

PRE-PROGRAMMED MICROS

Price for any of these micros is just $15.00 each + $10 p&p per order#

As a service to readers, *Silicon Chip OnLineShop* stocks microcontrollers and microprocessors used in new projects (from 2012 on) and some selected older projects – pre-programmed and ready to fly!

Some micros from copyrighted and/or contributed projects may not be available.

PIC12F675-I/P	UHF Remote Switch (Jan09), Ultrasonic Cleaner (Aug10) Ultrasonic Anti-fouling (Sep10), Cricket/Frog (Jun12), Do Not Disturb (May13) IR-to-UHF Converter (Jul13), UHF-to-IR Converter (Jul13) PC Birdies *2 chips – $15 pair* (Aug13), Driveway Monitor Receiver (July15) Hotel Safe Alarm (Jun16), 50A Battery Charger Controller (Nov16) Kelvin the Cricket (Oct17), Triac-based Mains Motor Speed Controller (Mar18) Heater Controller (Apr18)
PIC16F1455-I/P	Microbridge (May17), USB Flexitimer (June18)
PIC16F1507-I/P	Wideband Oxygen Sensor (Jun-Jul12)
PIC16F617-I/P	Temperature Switch Mk2 (June18), **Recurring Event Reminder (Jul18)**
PIC12F675-I/P	Courtesy LED Light Delay for Cars (Oct14), Fan Speed Controller (Jan18)
PIC16F88-E/P	Hi Energy Ignition (Nov/Dec12), Speedo Corrector (Sept13) Auto Headlight Controller (Oct13), 10A 230V Motor Speed Controller (Feb14) Automotive Sensor Modifier (Dec16)
PIC16F88-I/P	Projector Speed (Apr11), Vox (Jun11), Ultrasonic Water Tank Level (Sep11) Quizzical (Oct11), Ultra LD Preamp (Nov11), 10-Channel Remote Control Receiver (Jun13), Revised 10-Channel Remote Control Receiver (Jul13) Nicad/NiMH Burp Charger (Mar14), Remote Mains Timer (Nov14) Driveway Monitor Transmitter (July15), Fingerprint Scanner (Nov15) MPPT Lighting Charge Controller (Feb16), 50/60Hz Turntable Driver (May16) Cyclic Pump Timer (Sep16), 60V 40A DC Motor Speed Controller (Jan17) Pool Lap Counter (Mar17), Rapidbrake (Jul17), Deluxe Frequency Switch (May18)
PIC16LF88-I/P	Garbage Reminder (Jan13), Bellbird (Dec13), GPS Analog Clock Driver (Feb17)
PIC16LF88-I/SO	LED Ladybird (Apr13)
PIC16LF1709-I/SO	Battery Cell Balancer (Mar16)
PIC16F877A-I/P	6-Digit GPS Clock (May-Jun09), Lab Digital Pot (Jul10), Semtest (Feb-May12)
PIC16F2550-I/SP	Batt Capacity Meter (Jun09), Intelligent Fan Controller (Jul10)
PIC18F4550-I/P	GPS Car Computer (Jan10), GPS Boat Computer (Oct10)
PIC18LF14K22	Digital Spirit Level (Aug11), G-Force Meter (Nov11)
PIC32MX795F512H-80I/PT	Maximite (Mar11), miniMaximite (Nov11), Colour Maximite (Sept/Oct12) Touchscreen Audio Recorder (Jun/Jul 14)
PIC32MX170F256B-50I/SP	Micromite Mk2 (Jan15) – *also includes **FREE** 47µF tantalum capacitor* Micromite LCD BackPack [either version] (Feb16), GPS Boat Computer (Apr16) Micromite Super Clock (Jul16), Touchscreen Voltage/Current Ref (Oct-Dec16) Micromite LCD BackPack V2 (May17), Deluxe eFuse (Aug17) Micromite DDS for IF Alignment (Sept17), **Tariff Clock (Jul18)**
PIC32MX170F256B-I/SP	Low Frequency Distortion Analyser (Apr15)
PIC32MX170F256D-501P/T	44-pin Micromite Mk2
PIC32MX250F128B-I/SP	GPS Tracker (Nov13), Micromite ASCII Video Terminal (Jul14)
PIC32MX470F512H-I/PT	Stereo Audio Delay/DSP (Nov13), Stereo Echo/Reverb (Feb 14) Digital Effects Unit (Oct14)
PIC32MX470F512H-120/PT	Micromite PLUS Explore 64 (Aug 16), Micromite Plus LCD BackPack (Nov16)
PIC32MX470F512L-120/PT	Micromite PLUS Explore 100 (Sep-Oct16)

When ordering, be sure to nominate BOTH the micro required AND the project for which it must be programmed.

SPECIALISED COMPONENTS

P&P: FLAT RATE $10.00 PER ORDER#
PCBs, COMPONENTS ETC MAY BE COMBINED (in one order) FOR $10-PER-ORDER P&P RATE

NEW-THIS-MONTH:

MICROMITE BACKPACK KIT FOR THE TARIFF CLOCK *(JUL 18)*
Complete kit programmed with the BASIC software for the Tariff Clock, we recommend using the V2 kit. V1 BackPack – **$65.00** ~ V2 BackPack – **$70.00**

RECURRING EVENT REMINDER PCB+PIC BUNDLE *(JUL 18)* **$15.00**
PCB and programmed micro for a discount price

USB PORT PROTECTOR COMPLETE KIT *(MAY 18)* **$15.00**
All parts including the PCB and a length of clear heatshrink tubing

AM RADIO TRANSMITTER *(MAR 18)* **$2.50**
MC1496P double-balanced mixer IC (DIP-14)

VINTAGE TV A/V MODULATOR *(MAR 18)*
MC1374P A/V modulator IC (DIP-14) **$5.00**
SBK-71K coil former pack **(two required)** **$5.00 ea.**

ALTIMETER/WEATHER STATION *(DEC 17)*
Micromite 2.8-inch LCD BackPack kit programmed for the Altimeter project **$65.00**
GY-68 barometric pressure and temperature sensor module (with BMP180, Cat SC4343) **$5.00**
DHT22 temperature and humidity sensor module (Cat SC4150) **$7.50**
Elecrow 1A/500mA Li-ion/LiPo charger board (**optional**, Cat SC4308) **$15.00**

DELUXE EFUSE PARTS *(AUG 17)*
IPP80P03P4L04 P-channel mosfets (Cat SC4318) **$4.00 ea.**
BUK7909-75AIE 75V 120A N-channel SenseFet (Cat SC4317) **$7.50 ea.**
LT1490ACN8 dual op amp (Cat SC4319) **$7.50 ea.**

STATIONMASTER (CAT SC4187) *(MAR 17)*
Hard to get parts: DRV8871 IC, SMD 1µF capacitor and 100kΩ potentiometer with detent **$12.50**

PARTS FOR THE 6GHz+ TOUCHSCREEN FREQUENCY COUNTER *(OCT 17)*
Explore 100 kit (Cat SC3834; no LCD included) **$69.90**
one ERA-2SM+ & one ADCH-80A+ (Cat SC1167; two packs required) **$15.00/pk.**

MICROBRIDGE COMPLETE KIT (CAT SC4264) *(MAY 17)* **$20.00**
PCB plus all on-board parts including programmed microcontroller (SMD ceramics for 10µF)

MICROMITE LCD BACKPACK V2 – COMPLETE KIT (CAT SC4237) *(MAY 17)* **$70.00**
includes PCB, programmed micro, touchscreen LCD, laser-cut UB3 lid, mounting hardware, SMD Mosfets for PWM backlight control and all other on-board parts

ULTRA LOW VOLTAGE LED FLASHER (CAT SC4125) *(FEB 17)* **$12.50**
kit including PCB and all SMD parts, LDR and blue LED

VARIOUS MODULES & PARTS
2.8-inch TFT touchscreen LCD module with SD card socket (Tide Clock, JUL18) **$22.50**
ESP-01 WiFi Module (El Cheapo Modules, Part 15, APR18) **$5.00**
WiFi Antennas with U.FL/IPX connectors (Water Tank Level Meter with WiFi, FEB18):
5dBi – **$12.50** ~ 2dBi (omnidirectional) – **$10.00**
NRF24L01+PA+NA transceiver with SNA connector and antenna (El Cheapo 12, JAN18) **$5.00**
WeMos D1 Arduino-compatible boards with WiFi (SEPT17, FEB18):
ThingSpeak data logger – **$10.00** ~ WiFi Tank Level Meter (ext. antenna socket) – **$15.00**
Geeetech Arduino MP3 shield (Arduino Music Player/Recorder, VS1053, JUL17) **$20.00**
1nF 1% MKP (5mm lead spacing) or ceramic capacitor (Wide-Range LC Meter, JUN18) **$2.50**
MAX7219 LED controller boards (El Cheapo Modules, Part 7, JUN17):
8x8 red SMD/DIP matrix display – **$5.00** ~ red 8-digit 7-segment display – **$7.50**
AD9833 DDS module (with gain control) (for Micromite DDS, APR17) **$25.00**
AD9833 DDS module (no gain control) (El Cheapo Modules, Part 6, APR17) **$15.00**
CP2102 USB-UART bridge **$5.00**
microSD card adaptor (El Cheapo Modules, Part 3, JAN17) **$2.50**
DS3231 real-time clock with mounting spacers and screws (El Cheapo, Part 1, OCT16) **$5.00**

All items subect to availability. Prices valid for month of magazine issue only. All prices in Australian dollars and included GST where applicable. **# P&P prices are within Australia. O'seas? Check the website or email for a quote.**

To Place Your Order:

INTERNET (24/7)	PAYPAL (24/7)	eMAIL (24/7)	MAIL (24/7)	PHONE - (9-4:30, Mon-Fri)
siliconchip.com.au/Shop	Use your PayPal account	silicon@siliconchip.com.au	Your order to PO Box 139	Call (02) 9939 3295 with
	silicon@siliconchip.com.au	with order & credit card details	Collaroy NSW 2097	with order & credit card details

You can also order and pay by cheque/money order (Orders by mail only). ^ Make cheques payable to Silicon Chip Publications.

7/18

tive NTP server (see notes on the bottom of page 65 of the article).

If this doesn't help you troubleshoot the problem, please send us a copy of the data from the Arduino serial monitor to see what that might tell us.

If the serial data appears correct when testing the module in isolation but it still doesn't work with the clock, it should be possible to monitor the serial data from the ESP8266 board to the clock while they are both connected, by wiring the ESP8266 TX and GND pins to the clock and the USB cable to your computer.

LCD for Deep Cycle 12V Charger

I've had a copy of your article on the Deep Cycle 12V Battery Charger (November & December 2004; siliconchip.com.au/Series/102) for a number of years but have only just gotten around to thinking about building it.

I'm about to order the programmed PIC. Clearly, LCD display technology has progressed in the intervening 11 years and there is now a bewildering array of modules available.

Could you please advise on the specifications I should look for as this is my first foray beyond the simple LED indicator. I'm in the UK so my preferred suppliers are RS or CPC. I may well make my own PCBs so adding a couple of extra tracks for a backlight supply would be easy enough. (G. W., Witney, UK)

● RS Cat 532-6486 should be suitable and is similar to the Jaycar module that we used at the time. You can download the data sheet from their website.

Reducing the Ultra-LD amp's output to 50W

How would I go about reducing the output of the Ultra-LD Mk.4 Class-AB amplifier (described in 2015; siliconchip.com.au/Series/289) down to under 50W RMS?

I want to build it with a 50W custom 4Ω bookshelf speaker setup (depending on speaker selection in the end) and I am just worried about damaging them if it is turned up too much.

Also, the availability of the HN3A51F and HN3C51F is tricky now with them being obsolete. There are 50V alternatives though (HN1A01F and HN1C01F) or would they not handle the peak to peak of the DC rail, even if it was reduced to, say, ±35V or something like that? (J. D., via email)

● It seems as though you probably have seen the modifications necessary to reduce the amplifier's power output to 110W into a 4Ω load in the October 2015 issue.

If you are using 4Ω loudspeakers, the difference between a maximum power of 110W and 50W is only 3.4dB which you would be unlikely to notice in normal listening, even if you did occasionally drive the amplifier into overload.

On the other hand, if you did consistently over-drive the speakers you are possibly more justified in being worried.

Paradoxically, if you reduced the maximum power output to 50W and then drove the amplifier into clipping more frequently, the resultant peak power in the speaker could be higher and thus there could be more chance of damage.

If you have not seen the October 2015 article, the main changes were to omit one pair of output power transistors, using a smaller power transformer and then some slight passive component changes enabled to suit the lower supply rails.

If you do decide to reduce the amplifier's supply rails to ±35V, you can use a transformer with a centred-tapped 50VAC secondary and there would be no need to make other changes apart from those listed in the October 2015 article. You can see a free preview of that article at siliconchip.com.au/Article/9132

We also sell the HN3(A/C)51F on our website if you need them (siliconchip.com.au/Shop/7/3400). Otherwise, the substitution of HN1A01F and HN1C01F transistors with the 50V rating would be OK for these front-end transistors.

Or you could use the IMT4T108 and IM8T108 transistors suggested as substitutes in Mailbag, February 2018 on page 8. The latter transistors have much higher collector voltage ratings.

VHF Yagi Antenna questions

I have some questions regarding the 6-Element VHF TV Yagi antenna design from the February 2018 issue (siliconchip.com.au/Article/10965).

1. Why is the dipole upper element connected to the boom?

2. If the dipole upper element was isolated from the boom (like the lower elements), would this improve the performance or does it need grounding at that top centre point?

3. Could two pieces of acrylic be used to do this?

4. The exact V-Block position is not shown. Should it be 200mm back from the centre of the dipole?

5. Would a bend at the ends of the dipole be better than having the spacers?

6. If the boom/dipole/elements were all made from 10mm diameter 316 stainless steel rod with the reflector and directors welded to boom, would it improve performance? Obviously, this would increase the cost.

It's a great article, by the way. (D. M., Hillside, Vic)

● These are all good questions and we will answer them in turn.

In principle, none of the elements need to be connected to the boom. In fact, the boom could be a non-conductor such as timber or fibreglass. In practice, since we are using a conductive boom, it is easier to connect all elements to the boom than not do so. It will not make any difference to the electrical performance.

Remember that each element is electrically resonant at a particular frequency and in each case, the fixing point is at a node (ie, the centre). That is why it makes no difference whether each element is connected to the boom or not.

Since the V-block mounts the boom at right angles to the mast, its actual fixing point to the boom is not critical. The position you are suggesting should be OK.

Virtually all commercial Yagi TV antennas have folded dipoles with bends as that can be easily done in a mass production process with thinner walled tubing (more easily bent). It is also cheaper to do it that way in a mass-produced item.

There would be no performance improvement in using 316 stainless steel rod (or tubing) to make the antenna but it would be a great deal more expensive and considerably heavier. However, an antenna made from stainless steel tubing will last for a great many years longer, especially if used in locations very close to the sea.

Home units close to the sea sometimes do have stainless steel antennas. However, corrosion is still likely to affect the cable connections. SC

MARKET CENTRE

Cash in your surplus gear. Advertise it here in SILICON CHIP

FOR SALE

tronixlabs.com.au – Australia's best value for supported hobbyist electronics from Adafruit, SparkFun, Arduino, Freetronics, Raspberry Pi – along with kits, components and much more – with same-day shipping.

LEDs, BRAND NAME and generic LEDs. Heatsinks, fans, LED drivers, power supplies, LED ribbon, kits, components, hardware, EL wire.
www.ledsales.com.au

Master Instruments

AUSTRALIA'S BATTERY EXPERTS

Australian owned and operated manufacturer and wholesaler with strong global partnerships in the portable power industry, supplying Lithium Ion, Lithium Iron Phosphate, Nickel Metal Hydride (NiMH), SLA/VRLA and primary batteries as well as chargers, analysers, power supplies and related products in the Australian / New Zealand and Oceania region.

Our scope includes the following:

- Consumer & Retail
- Industrial Applications
- Government Agencies
- Resources Sector
- Custom Pack Builds
- Repacks & Refurbs
- Engineering Services
- Importer & Distributor

WHAT CAN MASTER INSTRUMENTS DO FOR YOU? CONTACT US

NSW: (02) 9519 1200 WA: (08) 9302 5444 VIC: (03) 9872 6422
sales@master-instruments.com.au Find us Google+

PCB PRODUCTION

Trouble buying old components?
Need to re-spin an obsolete PCB?
We do PCB layouts from files, drawings or samples.
Contact Steve at sgobrien8@gmail.com or phone 0401 157 285.
Get your old PCBs updated and keep production going!

PCBs MADE, ONE OR MANY. Any format, hobbyists welcome. Sesame Electronics Phone 0434 781 191.
nev-sesame@outlook.com
www.sesame.com.au

PCB MANUFACTURE: single to multilayer. Bare board tested. One-offs to any quantity. 48 hour service. Artwork design. Excellent prices.
Check out our specials:
www.ldelectronics.com.au

SILICON CHIP ON-LINE SHOP
www.siliconchip.com.au/shop

KIT ASSEMBLY & REPAIR

DAVE THOMPSON (the Serviceman from SILICON CHIP) is available to help you with kit assembly, project troubleshooting, general electronics and custom design work. No job too small. Based in Christchurch, NZ but service available Australia/NZ wide.
Email dave@davethompson.co.nz

VINTAGE RADIO REPAIRS: electrical mechanical fitter with 36 years experience and extensive knowledge of valve and transistor radios. Professional and reliable repairs. All workmanship guaranteed. $17 inspection fee plus charges for parts and labour as required. Labour fees $38 p/h. Pensioner discounts available on application.
Contact Alan, VK2FALW on 0425 122 415 or email bigalradioshack@gmail.com

KEITH RIPPON KIT ASSEMBLY & REPAIR:
* Australia & New Zealand;
* Small production runs.
Phone Keith 0409 662 794.
keith.rippon@gmail.com

ADVERTISING IN MARKET CENTRE

Classified Ad Rates: $32.00 for up to 20 words (punctuation not charged) plus $1.20 for each additional word. Display ads in Market Centre (minimum 2cm deep, maximum 10cm deep): $82.50 per column centimetre per insertion. All prices include GST. Closing date: 5 weeks prior to month of sale. To book, email the text to silicon@siliconchip.com.au and include your name, address & credit card details, or phone Glyn (02) 9939 3295 or 0431 792 293.

The Philips Compact Cassette . . . continued from page 33

selected "normal" 120µs (ie, a standard ferric oxide) tape. I found some "junk box" tapes to be pretty awful.

The record level meter is reliable, with an acceptable 3% distortion level corresponding to the centre of the red zone. Speed constancy is specified in two ways: wow (slow variations up to 5Hz), and flutter (variations from 5Hz to 30Hz). Wow measured at 0.3%, flutter at 0.4%. I expected better and suspect variations in holdback tension as the main cause.

There was also a definite "flanging" effect (for anyone who remembers "Itchycoo Park") that's consistent with tape slewing across the playback head. Playback speed was constant down to a supply voltage of 4.7V.

EL3302 versions

There are the preceding EL3300/3301, distinguished mainly by a white plastic operation lever, and the following EL3303.

Several variants of the EL3302 were produced around the world. The basic mechanism was widely re-badged by European (Telefunken, Siera), US (Norelco, Mercury, Wollensak) and Japanese (Panasonic) manufacturers, among others.

Further reading

For the EL3302, see: www.petervis.com/Cassette_Tape_Recorders/ and look for the EL3302 – as well as the user manual, Peter has an extensive description complete with great photos.

For general references, see: en.wikipedia.org/wiki/Compact_Cassette

For a more complete discussion, see: siliconchip.com.au/link/aaj2

On bias, (a quick summary), see: siliconchip.com.au/link/aaj3

For a detailed discussion of bias, see: www.hccc.org.uk/acbias.html SC

Coming up in Silicon Chip

Altium Designer 2018 review
We have been using Altium Designer to develop circuits and design PCBs for many years now. In that time, quite a few improvements have been made to the software. We'll describe the new features and also point out some of the pre-existing features that have been improved or are particularly useful.

Introduction to programming the Cyprus CY8CKIT
This low-cost module incorporates a 32-bit microcontroller and a set of reprogrammable analog circuitry which can be used for a wide range of tasks.

Pill Cameras
Endoscopes can not be used to examine the small intestine in humans. Dr David Maddison takes a look at pill camera technology. They can photograph the entire human digestive system and help to diagnose bowel cancer, ulcers, Crohn's Disease, Coeliac Disease and other alimentary ailments.

Use an infrared remote to control your computer
This project is super-easy to build, compact, and is especially useful for when you have a computer hooked up to your TV. You can use it to control video or music player software or just about anything else, from a distance.

Note: these features are planned or are in preparation and should appear within the next few issues of Silicon Chip.

The August 2018 issue is due on sale in newsagents by Thursday, July 26th. Expect postal delivery of subscription copies in Australia between July 25th and August 10th.

Starting from the 1st of July, the cost of Silicon Chip binders will be increased to $19.50. This also affects the cost of subscriptions that include binders; $134.50 for 12 months with a binder. Postage charges have not changed.

Notes & Errata

AM Radio Transmitter, March 2018: there is an error in the connection of the 2.2MΩ resistor in the first batch of PCBs sold. It is connected to the collector of Q2 rather than its base. If you have a RevB PCB, cut the track from the 2.2MΩ resistor to Q2 and bend the resistor lead over and solder it to the middle pin of Q2. Newer (RevC) boards will have this change incorporated. Also, in the circuit diagram (Fig.2), the 4.7nF capacitor and its 1kΩ series resistor between T1 and pin 10 of IC1 should be swapped.

Advertising Index

Altronics 22-25
AEE Electronex 9
Blamey Saunders hears 7
Dave Thompson 103
Digi-Key Electronics 3
Emona ..... IBC
Hare & Forbes ..... OBC
Jaycar IFC,49-56
Keith Rippon Kit Assembly 103
LD Electronics 103
LEACH Co Ltd 42
LEDsales 103
Master Instruments 103
Microchip Technology 67
Oatley Electronics 15
Ocean Controls 33
PCBcart 11
Premier Batteries 14
Rohde & Schwarz 5
Sesame Electronics 103
Silicon Chip Back Issues 48
Silicon Chip Binders 85
Silicon Chip Shop 101
SC Radio, TV & Hobbies DVD 99
The Loudspeaker Kit.com 66
Tronixlabs 103
Vintage Radio Repairs 103
Wagner Electronics 8

WARNING!

Silicon Chip magazine regularly describes projects which employ a mains power supply or produce high voltage. All such projects should be considered dangerous or even lethal if not used safely.

Readers are warned that high voltage wiring should be carried out according to the instructions in the articles. When working on these projects use extreme care to ensure that you do not accidentally come into contact with mains AC voltages or high voltage DC. If you are not confident about working with projects employing mains voltages or other high voltages, you are advised not to attempt work on them. Silicon Chip Publications Pty Ltd disclaims any liability for damages should anyone be killed or injured while working on a project or circuit described in any issue of Silicon Chip magazine.

Devices or circuits described in Silicon Chip may be covered by patents. Silicon Chip disclaims any liability for the infringement of such patents by the manufacturing or selling of any such equipment. Silicon Chip also disclaims any liability for projects which are used in such a way as to infringe relevant government regulations and by-laws.

Advertisers are warned that they are responsible for the content of all advertisements and that they must conform to the Competition & Consumer Act 2010 or as subsequently amended and to any governmental regulations which are applicable.

"Rigol Offer Australia's Best Value Test Instruments"

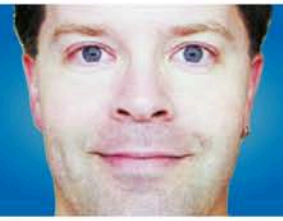

Oscilloscopes

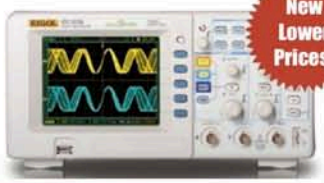

RIGOL DS-1000E Series

- 50MHz & 100MHz, 2 Ch
- 1GS/s Real Time Sampling
- USB Device, USB Host & PictBridge

FROM $379 ex GST

RIGOL DS-1000Z Series

- 50MHz, 70MHz & 100MHz, 4 Ch
- 1GS/s Real Time Sampling
- 24Mpts Standard Memory Depth

FROM $579 ex GST

RIGOL DS-2000E/A Series

- 70MHz, 100MHz & 200MHz, 2 Ch
- 1GS/s & 2GS/s Real Time Sampling
- From 14Mpts Memory Depth

FROM $912 ex GST

Function/Arbitrary Function Generators

RIGOL DG-1022

- 20MHz Maximum Output Frequency
- 2 Output Channels
- USB Device & USB Host

ONLY $539 ex GST

RIGOL DG-1000Z Series

- 25MHz, 30MHz & 60MHz
- 2 Output Channels
- 160 In-Built Waveforms

FROM $517 ex GST

Multimeters

RIGOL DM-3058E

- 5 1/2 Digit
- 9 Functions
- USB & RS232

ONLY $673 ex GST

Power Supplies

RIGOL DP-832

- Triple Output 30V/3A & 5V/3A
- Large 3.5 inch TFT Display
- USB Device, USB Host, LAN & RS232

ONLY $649 ex GST

Spectrum Analysers

RIGOL DSA Series

- 500MHz to 7.5GHz
- RBW settable down to 10 Hz
- Optional Tracking Generator

FROM $999 ex GST

Real-Time Analysers

RIGOL RSA-5000 Series

- 9kHz to 3.2GHz & 6.5GHz
- RBW settable down to 1 Hz
- Optional Tracking Generator

FROM $11,499 ex GST

Buy on-line at www.emona.com.au/rigol

Sydney
Tel 02 9519 3933
Fax 02 9550 1378

Melbourne
Tel 03 9889 0427
Fax 03 9889 0715

Brisbane
Tel 07 3392 7170
Fax 07 3848 9046

Adelaide
Tel 08 8363 5733
Fax 08 83635799

Perth
Tel 08 9361 4200
Fax 08 9361 4300

EMONA

email testinst@emona.com.au

web www.emona.com.au

HARE&FORBES MACHINERYHOUSE

"Setting the standard for Quality & Value"

A family owned Australian business
Established 1930

THE INDUSTRY'S CHOICE!

CNC Machinery | Metal Working | Sheet Metal Fabrication | Wood Working | Workshop & Automotive | Lifting Handling | Cutting Tools | Machine Tool Accessories | Measuring Equipment

RSP-500 Pneumatic Roller Seat

- 380-500 seat height
- Ø300mm padded seat
- 360° swivel wheels
- Moulded tool tray

$35 ~~$44~~ (A360)

TCS-3 - Mobile Tool Cabinet Seat

- 3 x drawers with ball bearing slides
- 420 x 235mm padded seat
- 2 x magnetic side trays
- 406mm seat height
- 360° swivel wheels

$88 ~~$110~~ (A001)

WCH-6D Workshop Series Tool Chest

- 600 x 260 x 340mm
- 6 drawers with protective liner
- Ball bearing slides
- Key lockable drawers & lid

$88 ~~$99~~ (T690)

ATBG280/6 Industrial Bench Grinder

- 150mm wheels
- Fine/coarse grit
- 0.37hp, 240V motor

$123 ~~$143~~ (G150)

RP7813 Air Die Grinder Kit

- 25,000rpm free speed
- 3cfm air consumption
- 10 grinding stones
- 3 & 6mm collet

$36 ~~$42.90~~ (A051)

RP7819 Micro Air Die Grinder Kit

- 54,000rpm
- 2cfm consumption
- 140 x Ø15.5mm grinder body
- Includes 10 stones, 3mm collet & inline oiler

$42 ~~$49.50~~ (A052)

RP7322 Air Belt Sander

- 10 x 330mm belt
- Swivels 40° left & right
- Requires 7.1cfm
- 16000rpm

$84 ~~$99~~ (A066)

RAV2.75/36 Air Compressor

- 205l/min. pump
- 36 litre tank
- 100psi pressure
- 2.75hp, 240V

$440 ~~$462~~ (C327)

MGP-6R Ratcheting Gear Puller Set

- Ratchet action jaw lock alignment
- Combination 2 or 3 jaw type system
- Reversible jaws (Internal or External)
- Includes 3 x 100mm & 3 x 175mm legs
- Includes a blow mould case

$99 ~~$132~~ (P005)

Metric HSS Hole Saw Set

- 11 piece set
- M42 Bi-Metal high speed steel
- 19, 22, 25, 32, 35, 38, 44, 51, 57, 64, 76mm
- Includes 3/8" & 1/2" arbor shank & pilot drill

$93 ~~$110~~ (D102)

Metric Precision HSS Drill Set

- 170 piece set
- HSS precision ground flutes
- Ø1.0~Ø10mm in 0.5mm increments
- 10 drills per size up to 8mm then 5 per size

$165 ~~$209~~ (D126)

PD-325 Pedestal Drill

- 16mm drill capacity
- 2MT spindle
- 12 spindle speeds
- Swivel & tilt table
- 1hp, 240V motor

$319 ~~$374~~ (D592)

2670 Metric Thread Restorer File

- Thread Pitch: 0.75, 1.00, 1.25, 1.50, 1.75, 2.00, 2.50, 3.00mm
- High tempered steel

$29.70 ~~$33~~ (T119)

LANG

2665 - Imperial Thread Restorer File

- 11, 12, 13, 14, 16, 18, 20, 24TPI
- High tempered steel

$29.70 ~~$33~~ (T120)

LANG

Alloy Steel Tap & Die Set

- 32 piece set
- M3 ~ M12 alloy steel
- Includes button die holder wrench, tap wrench, screw pitch gauge, screwdriver

$59 ~~$71.50~~ (T012)

Alloy Steel Tap & Die Set

- 32 piece set
- M3 ~ M12 alloy steel
- Includes button die holder wrench, tap wrench, screw pitch gauge, screwdriver

$112 ~~$132~~ (T100)

ALL THIS & MORE IN STORE & ONLINE

- MARK
Staff Member

2581 - Imperial Thread Restorer Tap & Die Kit

- Hex shaped for use with a socket
- Tempered steel for strength & durability
- 1/4" - 5/8"
- Made in the USA

$79.20 ~~$89.10~~ (T116)

LANG

2584 - Metric Thread Restorer Tap & Die Kit

- 15 piece set
- M6 ~ M12
- Fine or coarse threads
- High tempered steel
- 1 x double ended thread file
- Made in USA

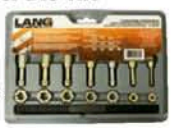

$93.50 ~~$104.50~~ (T115)

LANG

971 - Thread Restorer Tap & Die Kit

- 48 piece set
- Metric (M6 ~ M14)
- UNC & UNF (1/4" ~ 5/8")
- Fine & coarse threads
- Made in USA

$242 ~~$275~~ (T117)

LANG

UNIQUE PROMO CODE

SCJUL18

ONLINE OR INSTORE!

VIEW AND PURCHASE THESE ITEMS ONLINE AT www.machineryhouse.com.au/SCJUL18

BECOME A MACHINERYHOUSE MATE
www.machineryhouse.com.au/signup

$70 FREE DISCOUNT VOUCHERS

SYDNEY	BRISBANE	MELBOURNE	PERTH
(02) 9890 9111	(07) 3715 2200	(03) 9212 4422	(08) 9373 9999
1/2 Windsor Rd, Northmead	625 Boundary Rd, Coopers Plains	4 Abbotts Rd, Dandenong	11 Valentine St, Kewdale

Specifications & Prices are subject to change without notification. All prices include GST and valid until 31-07-18

07_SC_280618